Helical bevel gear units K

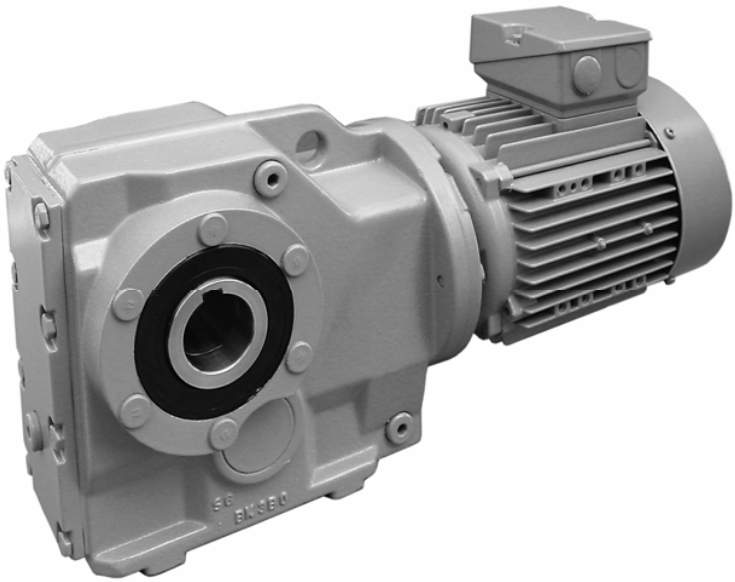

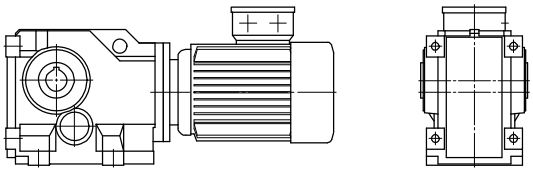

Foot mounted version
Hollow shaft with keyway
Example: K43**A** DM90L4

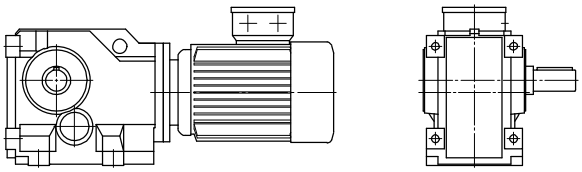

Foot mounted version
Output shaft with key
Example: K33**AV** DM80G4

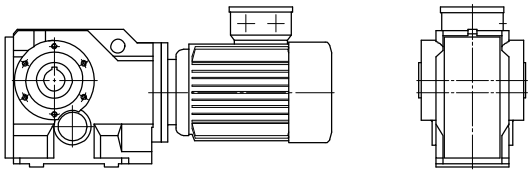

Shaft mounted version
Hollow shaft with keyway
Example: K53**B** DA132S4

Helical bevel gear units K

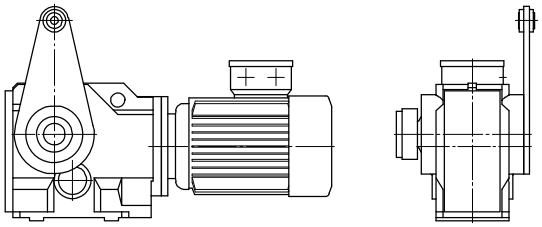

Shaft mounted version
Hollow shaft with shrink disc
Torque arm T1
Example: K53**BT1S** DA160M4

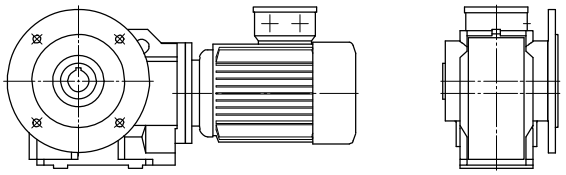

Flange mounted version
Hollow shaft with keyway
Example: K43**C** DA132S4

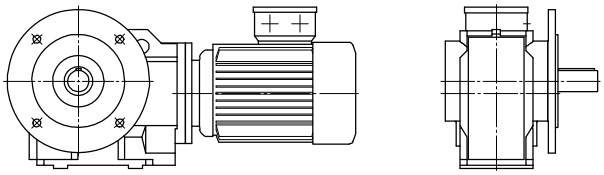

Flange mounted version
Output shaft with key
Example: K33**CV** DM71G4

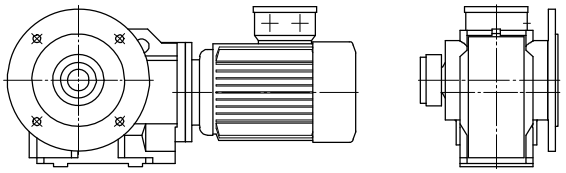

Flange mounted version
Hollow shaft with shrink disc
Example: K43**CS** DM100LX4

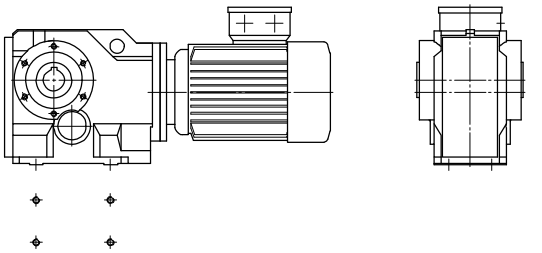

Shaft mounted version + foot area
Hollow shaft with keyway
Example: K53**D** DM80G4

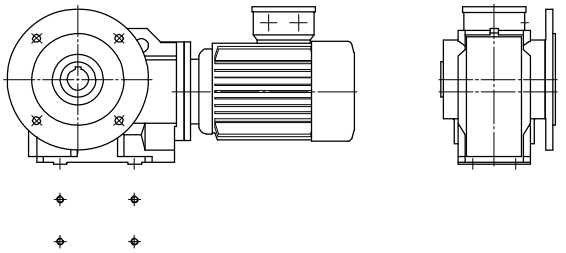

Flange mounted version + foot area
Hollow shaft with keyway
Example: K33**E** DM90S4

Helical bevel gear units K

i	n2 (n1=1400) [1/min]	T2max [Nm]	P1max [kW]	Jg [kgcm²]	Three phase motor DM/DA 63 71 80 90 100 112 132 160 180 200 225	Servo motor TA 31 32 33 41 42 43 51 52 53 61 62 63	-W	Motor adapter -M IEC 63 71 80 90 100 112 132 160 180	-M NEMA 56 140 180 210 250 280	-M S 70 90 110 140 190
K23G03										
5483.4	0.26	**205**	<0.05	0.04	○ ○ – – – – – – – – – –	○ – – – – – – – – – – –	W1	○ ○ – – – – – – – –	○ – – – – –	○ – – – –
4632.4	0.30	**205**	<0.05	0.05	○ ○ – – – – – – – – – –	○ – – – – – – – – – – –	W1	○ ○ – – – – – – – –	○ – – – – –	○ – – – –
3960.6	0.35	**205**	<0.05	0.07	○ ○ – – – – – – – – – –	○ – – – – – – – – – – –	W1	○ ○ – – – – – – – –	○ – – – – –	○ – – – –
3416.7	0.41	**205**	<0.05	0.08	○ ○ – – – – – – – – – –	○ – – – – – – – – – – –	W1	○ ○ – – – – – – – –	○ – – – – –	○ – – – –
2967.4	0.47	**205**	<0.05	0.10	○ ○ – – – – – – – – – –	○ – – – – – – – – – – –	W1	○ ○ – – – – – – – –	○ – – – – –	○ – – – –
2590.0	0.54	**205**	<0.05	0.12	○ ○ – – – – – – – – – –	○ – – – – – – – – – – –	W1	○ ○ – – – – – – – –	○ – – – – –	○ – – – –
2235.6	0.63	**205**	<0.05	0.07	○ ○ – – – – – – – – – –	○ – – – – – – – – – – –	W1	○ ○ – – – – – – – –	○ – – – – –	○ – – – –
1928.6	0.73	**205**	<0.05	0.09	○ ○ – – – – – – – – – –	○ – – – – – – – – – – –	W1	○ ○ – – – – – – – –	○ – – – – –	○ – – – –
1675.0	0.84	**205**	<0.05	0.11	○ ○ – – – – – – – – – –	○ – – – – – – – – – – –	W1	○ ○ – – – – – – – –	○ – – – – –	○ – – – –
1462.0	0.96	**205**	<0.05	0.13	○ ○ – – – – – – – – – –	○ – – – – – – – – – – –	W1	○ ○ – – – – – – – –	○ – – – – –	○ – – – –
K23G02										
1283.3	1.1	**205**	<0.05	0.05	○ ○ – – – – – – – – – –	○ – – – – – – – – – – –	W1	○ ○ – – – – – – – –	○ – – – – –	○ – – – –
1084.2	1.3	**205**	<0.05	0.06	○ ○ – – – – – – – – – –	○ – – – – – – – – – – –	W1	○ ○ – – – – – – – –	○ – – – – –	○ – – – –
926.94	1.5	**205**	<0.05	0.08	○ ○ – – – – – – – – – –	○ – – – – – – – – – – –	W1	○ ○ – – – – – – – –	○ – – – – –	○ – – – –
799.65	1.8	**205**	<0.05	0.09	○ ○ – – – – – – – – – –	○ – – – – – – – – – – –	W1	○ ○ – – – – – – – –	○ – – – – –	○ – – – –
694.50	2.0	**205**	<0.05	0.12	○ ○ – – – – – – – – – –	○ – – – – – – – – – – –	W1	○ ○ – – – – – – – –	○ – – – – –	○ – – – –
606.18	2.3	**205**	<0.05	0.14	○ ○ – – – – – – – – – –	○ – – – – – – – – – – –	W1	○ ○ – – – – – – – –	○ – – – – –	○ – – – –
530.94	2.6	**205**	0.06	0.18	○ ○ – – – – – – – – – –	○ – – – – – – – – – – –	W1	○ ○ – – – – – – – –	○ – – – – –	○ – – – –
456.34	3.1	**205**	0.07	0.10	○ ○ – – – – – – – – – –	○ – – – – – – – – – – –	W1	○ ○ – – – – – – – –	○ – – – – –	○ – – – –
393.68	3.6	**205**	0.08	0.12	○ ○ – – – – – – – – – –	○ – – – – – – – – – – –	W1	○ ○ – – – – – – – –	○ – – – – –	○ – – – –
341.91	4.1	**205**	0.09	0.16	○ ○ – – – – – – – – – –	○ – – – – – – – – – – –	W1	○ ○ – – – – – – – –	○ – – – – –	○ – – – –
298.43	4.7	**205**	0.10	0.20	○ ○ – – – – – – – – – –	○ – – – – – – – – – – –	W1	○ ○ – – – – – – – –	○ – – – – –	○ – – – –
261.38	5.4	**205**	0.11	0.26	○ ○ – – – – – – – – – –	○ – – – – – – – – – – –	W1	○ ○ – – – – – – – –	○ – – – – –	○ – – – –
228.47	6.1	**205**	0.13	0.26	○ ○ – – – – – – – – – –	○ – – – – – – – – – – –	W1	○ ○ – – – – – – – –	○ – – – – –	○ – – – –
201.29	7.0	**205**	0.15	0.26	○ ○ – – – – – – – – – –	○ – – – – – – – – – – –	W1	○ ○ – – – – – – – –	○ – – – – –	○ – – – –
178.45	7.8	**205**	0.17	0.26	○ ○ – – – – – – – – – –	○ – – – – – – – – – – –	W1	○ ○ – – – – – – – –	○ – – – – –	○ – – – –
159.00	8.8	**205**	0.19	0.27	○ ○ ○ – – – – – – – –	○ – – – – – – – – – – –	W1	○ ○ – – – – – – – –	○ – – – – –	○ – – – –
142.73	9.8	**205**	0.21	0.27	○ ○ ○ – – – – – – – –	○ – – – – – – – – – – –	W1	○ ○ – – – – – – – –	○ – – – – –	○ – – – –
124.58	11	**205**	0.24	0.27	○ ○ ○ – – – – – – – –	○ – – – – – – – – – – –	W1	○ ○ – – – – – – – –	○ – – – – –	○ – – – –
109.11	13	**205**	0.27	0.28	○ ○ ○ – – – – – – – –	○ – – – – – – – – – – –	W1	○ ○ – – – – – – – –	○ – – – – –	○ – – – –
K23										
102.27	14	**205**	0.29	0.07	○ ○ – – – – – – – – – –	○ – – – – – – – – – – –	W1	○ ○ – – – – – – – –	○ – – – – –	○ – – – –
87.38	16	**205**	0.34	0.10	○ ○ – – – – – – – – – –	○ – – – – – – – – – – –	W1	○ ○ – – – – – – – –	○ – – – – –	○ – – – –
75.61	19	**205**	0.40	0.12	○ ○ ○ – – – – – – – –	○ ○ – – – – – – – – – –	W1	○ ○ ○ – – – – – – –	○ ○ – – – –	○ ○ – – –
66.09	21	**205**	0.45	0.14	○ ○ ○ ○ – – – – – – –	○ ○ ○ – – – – – – – – –	W1	○ ○ ○ ○ – – – – – –	○ ○ – – – –	○ ○ ○ – –
58.23	24	**205**	0.51	0.16	○ ○ ○ ○ – – – – – – –	○ ○ ○ – – – – – – – – –	W1	○ ○ ○ ○ – – – – – –	○ ○ – – – –	○ ○ ○ – –
51.62	27	**205**	0.58	0.18	○ ○ ○ ○ – – – – – – –	○ ○ ○ – – – – – – – – –	W1	○ ○ ○ ○ – – – – – –	○ ○ – – – –	○ ○ ○ – –
46.00	30	**205**	0.65	0.22	○ ○ ○ ○ – – – – – – –	○ ○ ○ – – – – – – – – –	W2	○ ○ ○ ○ – – – – – –	○ ○ – – – –	○ ○ ○ – –
41.29	34	**205**	0.72	0.24	○ ○ ○ ○ – – – – – – –	○ ○ ○ – – – – – – – – –	W2	○ ○ ○ ○ – – – – – –	○ ○ – – – –	○ ○ ○ – –
36.04	39	**205**	0.83	0.31	○ ○ ○ ○ – – – – – – –	○ ○ ○ ○ – – – – – – – –	W2	○ ○ ○ ○ – – – – – –	○ ○ – – – –	○ ○ ○ – –
31.57	44	**205**	0.95	0.35	○ ○ ○ ○ – – – – – – –	○ ○ ○ ○ – – – – – – – –	W2	○ ○ ○ ○ – – – – – –	○ ○ – – – –	○ ○ ○ – –
26.14	54	**205**	1.14	0.18	○ ○ ○ – – – – – – – –	○ ○ ○ ○ – – – – – – – –	W2	○ ○ ○ – – – – – – –	○ ○ – – – –	○ ○ – – –
22.85	61	**205**	1.31	0.21	○ ○ ○ ○ – – – – – – –	○ ○ ○ ○ ○ – – – – – – –	W2	○ ○ ○ ○ – – – – – –	○ ○ – – – –	○ ○ ○ – –
20.13	70	**205**	1.49	0.25	○ ○ ○ ○ – – – – – – –	○ ○ ○ ○ ○ – – – – – – –	W2	○ ○ ○ ○ – – – – – –	○ ○ – – – –	○ ○ ○ – –
17.84	78	**205**	1.68	0.30	○ ○ ○ ○ – – – – – – –	○ ○ ○ ○ ○ – – – – – – –	W2	○ ○ ○ ○ – – – – – –	○ ○ – – – –	○ ○ ○ – –
15.90	88	**205**	1.88	0.37	○ ○ ○ ○ – – – – – – –	○ ○ ○ ○ ○ – – – – – – –	W2	○ ○ ○ ○ – – – – – –	○ ○ – – – –	○ ○ ○ – –
14.27	98	**205**	2.10	0.43	○ ○ ○ ○ – – – – – – –	○ ○ ○ ○ ○ – – – – – – –	W2	○ ○ ○ ○ – – – – – –	○ ○ – – – –	○ ○ ○ – –
12.46	112	**205**	2.40	0.55	○ ○ ○ ○ – – – – – – –	○ ○ ○ ○ ○ – – – – – – –	W2	○ ○ ○ ○ – – – – – –	○ ○ – – – –	○ ○ ○ – –
10.91	128	**205**	2.74	0.67	○ ○ ○ ○ – – – – – – –	○ ○ ○ ○ ○ – – – – – – –	W2	○ ○ ○ ○ – – – – – –	○ ○ – – – –	○ ○ ○ – –
9.34	150	**161**	2.53	0.31	○ ○ ○ ○ – – – – – – –	○ ○ ○ ○ ○ – – – – – – –	W2	○ ○ ○ ○ – – – – – –	○ ○ – – – –	○ ○ ○ – –
8.28	169	**161**	2.85	0.37	○ ○ ○ ○ – – – – – – –	○ ○ ○ ○ ○ – – – – – – –	W2	○ ○ ○ ○ – – – – – –	○ ○ – – – –	○ ○ ○ – –
7.38	190	**161**	3.00	0.46	○ ○ ○ ○ – – – – – – –	○ ○ ○ ○ ○ – – – – – – –	W2	○ ○ ○ ○ – – – – – –	○ ○ – – – –	○ ○ ○ – –
6.63	211	**161**	3.00	0.54	○ ○ ○ ○ – – – – – – –	○ ○ ○ ○ ○ – – – – – – –	W2	○ ○ ○ ○ – – – – – –	○ ○ – – – –	○ ○ ○ – –
5.78	242	**161**	3.00	0.69	○ ○ ○ ○ – – – – – – –	○ ○ ○ ○ ○ – – – – – – –	W2	○ ○ ○ ○ – – – – – –	○ ○ – – – –	○ ○ ○ – –
5.07	276	**161**	3.00	0.86	○ ○ ○ ○ – – – – – – –	○ ○ ○ ○ ○ – – – – – – –	W2	○ ○ ○ ○ – – – – – –	○ ○ – – – –	○ ○ ○ – –

Helical bevel gear units K

i	n2 (n1=1400) [1/min]	T2max [Nm]	P1max [kW]	Jg [kgcm²]	Three phase motor DM/DA 63 71 80 90 100 112 132 160 180 200 225	Servo motor TA 31 32 33 41 42 43 51 52 53 61 62 63	-W	Motor adapter -M IEC 63 71 80 90 100 112 132 160 180	-M NEMA 56 140 180 210 250 280	-M S 70 90 110 140 190
K33G13										
8059.3	0.17	**400**	<0.05	0.05	○ ○ – – – – – – – – –	○ – – – – – – – – – – –	W1	○ ○ – – – – – – –	○ – – – – –	○ – – – –
6832.3	0.20	**400**	<0.05	0.07	○ ○ – – – – – – – – –	○ – – – – – – – – – – –	W1	○ ○ – – – – – – –	○ – – – – –	○ – – – –
5863.6	0.24	**400**	<0.05	0.08	○ ○ – – – – – – – – –	○ – – – – – – – – – – –	W1	○ ○ – – – – – – –	○ – – – – –	○ – – – –
5079.4	0.28	**400**	<0.05	0.09	○ ○ – – – – – – – – –	○ – – – – – – – – – – –	W1	○ ○ – – – – – – –	○ – – – – –	○ – – – –
4431.6	0.32	**400**	<0.05	0.11	○ ○ – – – – – – – – –	○ – – – – – – – – – – –	W1	○ ○ – – – – – – –	○ – – – – –	○ – – – –
3887.4	0.36	**400**	<0.05	0.13	○ ○ – – – – – – – – –	○ – – – – – – – – – – –	W1	○ ○ – – – – – – –	○ – – – – –	○ – – – –
3423.9	0.41	**400**	<0.05	0.16	○ ○ – – – – – – – – –	○ – – – – – – – – – – –	W1	○ ○ – – – – – – –	○ – – – – –	○ – – – –
3010.7	0.47	**400**	<0.05	0.08	○ ○ – – – – – – – – –	○ – – – – – – – – – – –	W1	○ ○ – – – – – – –	○ – – – – –	○ – – – –
2583.9	0.54	**400**	<0.05	0.09	○ ○ – – – – – – – – –	○ – – – – – – – – – – –	W1	○ ○ – – – – – – –	○ – – – – –	○ – – – –
2238.3	0.63	**400**	<0.05	0.11	○ ○ – – – – – – – – –	○ – – – – – – – – – – –	W1	○ ○ – – – – – – –	○ – – – – –	○ – – – –
1952.8	0.72	**400**	<0.05	0.14	○ ○ – – – – – – – – –	○ – – – – – – – – – – –	W1	○ ○ – – – – – – –	○ – – – – –	○ – – – –
K33G12										
1738.3	0.81	**400**	<0.05	0.07	○ ○ – – – – – – – – –	○ – – – – – – – – – – –	W1	○ ○ – – – – – – –	○ – – – – –	○ – – – –
1485.1	0.94	**400**	<0.05	0.11	○ ○ – – – – – – – – –	○ – – – – – – – – – – –	W1	○ ○ – – – – – – –	○ – – – – –	○ – – – –
1285.2	1.1	**400**	<0.05	0.13	○ ○ – – – – – – – – –	○ – – – – – – – – – – –	W1	○ ○ – – – – – – –	○ – – – – –	○ – – – –
1123.4	1.2	**400**	0.05	0.15	○ ○ – – – – – – – – –	○ – – – – – – – – – – –	W1	○ ○ – – – – – – –	○ – – – – –	○ – – – –
989.70	1.4	**400**	0.06	0.17	○ ○ – – – – – – – – –	○ – – – – – – – – – – –	W1	○ ○ – – – – – – –	○ – – – – –	○ – – – –
877.42	1.6	**400**	0.07	0.20	○ ○ – – – – – – – – –	○ – – – – – – – – – – –	W1	○ ○ – – – – – – –	○ – – – – –	○ – – – –
781.77	1.8	**400**	0.07	0.24	○ ○ – – – – – – – – –	○ – – – – – – – – – – –	W1	○ ○ – – – – – – –	○ – – – – –	○ – – – –
701.79	2.0	**400**	0.08	0.27	○ ○ – – – – – – – – –	○ – – – – – – – – – – –	W1	○ ○ – – – – – – –	○ – – – – –	○ – – – –
612.54	2.3	**400**	0.10	0.34	○ ○ – – – – – – – – –	○ – – – – – – – – – – –	W1	○ ○ – – – – – – –	○ – – – – –	○ – – – –
536.51	2.6	**400**	0.11	0.40	○ ○ – – – – – – – – –	○ – – – – – – – – – – –	W1	○ ○ – – – – – – –	○ – – – – –	○ – – – –
493.12	2.8	**400**	0.12	0.19	○ ○ – – – – – – – – –	○ – – – – – – – – – – –	W1	○ ○ – – – – – – –	○ – – – – –	○ – – – –
434.44	3.2	**400**	0.13	0.23	○ ○ – – – – – – – – –	○ – – – – – – – – – – –	W1	○ ○ – – – – – – –	○ – – – – –	○ – – – –
385.15	3.6	**400**	0.15	0.27	○ ○ – – – – – – – – –	○ – – – – – – – – – – –	W1	○ ○ – – – – – – –	○ – – – – –	○ – – – –
343.16	4.1	**400**	0.17	0.33	○ ○ – – – – – – – – –	○ – – – – – – – – – – –	W1	○ ○ – – – – – – –	○ – – – – –	○ – – – –
308.06	4.5	**400**	0.19	0.38	○ ○ ○ – – – – – – – –	○ – – – – – – – – – – –	W1	○ ○ ○ – – – – – –	○ ○ – – – –	○ ○ – – –
268.88	5.2	**400**	0.22	0.48	○ ○ ○ – – – – – – – –	○ – – – – – – – – – – –	W1	○ ○ ○ – – – – – –	○ ○ – – – –	○ ○ – – –
235.51	5.9	**400**	0.25	0.59	○ ○ ○ – – – – – – – –	○ – – – – – – – – – – –	W1	○ ○ ○ – – – – – –	○ ○ – – – –	○ ○ – – –
210.10	6.7	**400**	0.28	0.59	○ ○ ○ – – – – – – – –	○ – – – – – – – – – – –	W1	○ ○ ○ – – – – – –	○ ○ – – – –	○ ○ – – –
188.46	7.4	**400**	0.31	0.59	○ ○ ○ – – – – – – – –	○ ○ – – – – – – – – – –	W1	○ ○ ○ – – – – – –	○ ○ – – – –	○ ○ – – –
171.28	8.2	**400**	0.34	0.60	○ ○ ○ – – – – – – – –	○ ○ – – – – – – – – – –	W1	○ ○ ○ – – – – – –	○ ○ – – – –	○ ○ – – –
151.01	9.3	**400**	0.39	0.60	○ ○ ○ ○ – – – – – – –	○ ○ – – – – – – – – – –	W1	○ ○ ○ ○ – – – – –	○ ○ – – – –	○ ○ ○ – –
133.74	10	**400**	0.44	0.61	○ ○ ○ ○ – – – – – – –	○ ○ ○ – – – – – – – – –	W1	○ ○ ○ ○ – – – – –	○ ○ – – – –	○ ○ ○ – –
119.69	12	**400**	0.49	0.63	○ ○ ○ ○ – – – – – – –	○ ○ ○ – – – – – – – – –	W1	○ ○ ○ ○ – – – – –	○ ○ – – – –	○ ○ ○ – –
104.17	13	**400**	0.56	0.64	○ ○ ○ ○ – – – – – – –	○ ○ ○ – – – – – – – – –	W1	○ ○ ○ ○ – – – – –	○ ○ – – – –	○ ○ ○ – –

Helical bevel gear units K

i	n2 (n1=1400) [1/min]	T2max [Nm]	P1max [kW]	Jg [kgcm²]	Three phase motor DM/DA 63 71 80 90 100 112 132 160 180 200 225	Servo motor TA 31 32 33 41 42 43 51 52 53 61 62 63	-W	Motor adapter -M IEC 63 71 80 90 100 112 132 160 180	-M NEMA 56 140 180 210 250 280	-M S 70 90 110 140 190
K33										
120.13	12	**400**	0.49	0.13	○ ○ – – – – – – – – –	○ – – – – – – – – – – –	W1	○ ○ – – – – – – –	○ – – – – –	○ – – – –
103.13	14	**400**	0.57	0.16	○ ○ – – – – – – – – –	○ – – – – – – – – – – –	W1	○ ○ – – – – – – –	○ – – – – –	○ – – – –
89.71	16	**400**	0.65	0.20	○ ○ ○ – – – – – – – –	○ ○ ○ – – – – – – – – –	W2	○ ○ ○ – – – – – –	○ ○ – – – –	○ ○ – – –
78.85	18	**400**	0.74	0.24	○ ○ ○ ○ – – – – – – –	○ ○ ○ – – – – – – – – –	W2	○ ○ ○ ○ – – – – –	○ ○ – – – –	○ ○ ○ – –
69.88	20	**400**	0.84	0.27	○ ○ ○ ○ ○ – – – – – –	○ ○ ○ ○ – – – – – – – –	W2	○ ○ ○ ○ ○ – – – –	○ ○ ○ – – –	○ ○ ○ ○ –
62.34	22	**400**	0.94	0.31	○ ○ ○ ○ ○ – – – – – –	○ ○ ○ ○ – – – – – – – –	W2	○ ○ ○ ○ ○ – – – –	○ ○ ○ – – –	○ ○ ○ ○ –
55.92	25	**400**	1.05	0.35	○ ○ ○ ○ ○ – – – – – –	○ ○ ○ ○ ○ – – – – – – –	W2	○ ○ ○ ○ ○ – – – –	○ ○ ○ – – –	○ ○ ○ ○ –
50.82	28	**400**	1.15	0.41	○ ○ ○ ○ ○ – – – – – –	○ ○ ○ ○ ○ – – – – – – –	W2	○ ○ ○ ○ ○ – – – –	○ ○ ○ – – –	○ ○ ○ ○ –
44.80	31	**400**	1.31	0.47	○ ○ ○ ○ ○ – – – – – –	○ ○ ○ ○ ○ – – – – – – –	W2	○ ○ ○ ○ ○ – – – –	○ ○ ○ – – –	○ ○ ○ ○ –
39.68	35	**400**	1.47	0.57	○ ○ ○ ○ ○ – – – – – –	○ ○ ○ ○ ○ ○ ○ – – – – –	W2	○ ○ ○ ○ ○ – – – –	○ ○ ○ – – –	○ ○ ○ ○ –
35.51	39	**400**	1.65	0.80	– – – ○ ○ ○ – – – – –	– – – – ○ ○ ○ – – – – –	W2	– – ○ ○ ○ ○ – – –	– ○ ○ – – –	– ○ ○ ○ –
30.91	45	**400**	1.89	0.84	– – – ○ ○ ○ – – – – –	– – – – ○ ○ ○ – – – – –	W3	– – ○ ○ ○ ○ – – –	– ○ ○ – – –	– ○ ○ ○ –
27.26	51	**400**	2.15	0.39	○ ○ ○ ○ – – – – – – –	○ ○ ○ ○ ○ ○ – – – – – –	W2	○ ○ ○ ○ – – – – –	○ ○ – – – –	○ ○ ○ – –
24.15	58	**400**	2.42	0.47	○ ○ ○ ○ ○ – – – – – –	○ ○ ○ ○ ○ ○ ○ – – – – –	W3	○ ○ ○ ○ ○ – – – –	○ ○ ○ – – –	○ ○ ○ ○ –
21.55	65	**400**	2.71	0.56	○ ○ ○ ○ ○ ○ – – – –	○ ○ ○ ○ ○ ○ ○ – – – –	W3	○ ○ ○ ○ ○ ○ – – –	○ ○ ○ – – –	○ ○ ○ ○ –
19.33	72	**400**	3.03	0.66	○ ○ ○ ○ ○ ○ ○ – – – –	○ ○ ○ ○ ○ ○ ○ – – – –	W3	○ ○ ○ ○ ○ ○ – – –	○ ○ ○ – – –	○ ○ ○ ○ –
17.57	80	**400**	3.33	0.79	○ ○ ○ ○ ○ ○ ○ – – – –	○ ○ ○ ○ ○ ○ ○ – – – –	W3	○ ○ ○ ○ ○ ○ – – –	○ ○ ○ – – –	○ ○ ○ ○ –
15.49	90	**400**	3.78	0.96	○ ○ ○ ○ ○ ○ ○ – – – –	○ ○ ○ ○ ○ ○ ○ – – – –	W3	○ ○ ○ ○ ○ ○ – – –	○ ○ ○ – – –	○ ○ ○ ○ –
13.72	102	**400**	4.00	1.2	○ ○ ○ ○ ○ ○ ○ – – – –	○ ○ ○ ○ ○ ○ ○ – – – –	W3	○ ○ ○ ○ ○ ○ – – –	○ ○ ○ – – –	○ ○ ○ ○ –
12.27	114	**390**	4.00	1.6	– – – ○ ○ ○ – – – – –	– – – – ○ ○ ○ – – – – –	W3	– – ○ ○ ○ ○ – – –	– ○ ○ – – –	– ○ ○ ○ –
10.68	131	**375**	4.00	1.9	– – – ○ ○ ○ – – – – –	– – – – ○ ○ ○ – – – – –	W3	– – ○ ○ ○ ○ – – –	– ○ ○ – – –	– ○ ○ ○ –
9.30	151	**240**	3.80	0.79	○ ○ ○ ○ ○ ○ ○ – – – –	○ ○ ○ ○ ○ ○ ○ – – – –	W3	○ ○ ○ ○ ○ ○ – – –	○ ○ ○ – – –	○ ○ ○ ○ –
8.45	166	**300**	4.00	0.95	○ ○ ○ ○ ○ ○ ○ – – – –	○ ○ ○ ○ ○ ○ ○ – – – –	W3	○ ○ ○ ○ ○ ○ – – –	○ ○ ○ – – –	○ ○ ○ ○ –
7.45	188	**285**	4.00	1.2	○ ○ ○ ○ ○ ○ ○ – – – –	○ ○ ○ ○ ○ ○ ○ – – – –	W3	○ ○ ○ ○ ○ ○ – – –	○ ○ ○ – – –	○ ○ ○ ○ –
6.60	212	**275**	4.00	1.4	○ ○ ○ ○ ○ ○ ○ – – – –	○ ○ ○ ○ ○ ○ ○ – – – –	W3	○ ○ ○ ○ ○ ○ – – –	○ ○ ○ – – –	○ ○ ○ ○ –
5.91	237	**300**	4.00	1.9	– – – ○ ○ ○ – – – – –	– – – – ○ ○ ○ – – – – –	W3	– – ○ ○ ○ ○ – – –	– ○ ○ – – –	– ○ ○ ○ –
5.14	272	**290**	4.00	2.3	– – – ○ ○ ○ – – – – –	– – – – ○ ○ ○ – – – – –	W3	– – ○ ○ ○ ○ – – –	– ○ ○ – – –	– ○ ○ ○ –
K43G13										
10485	0.13	**745**	<0.05	0.05	○ ○ – – – – – – – – –	○ – – – – – – – – – – –	W1	○ ○ – – – – – – –	○ – – – – –	○ – – – –
8888.4	0.16	**745**	<0.05	0.07	○ ○ – – – – – – – – –	○ – – – – – – – – – – –	W1	○ ○ – – – – – – –	○ – – – – –	○ – – – –
7628.2	0.18	**745**	<0.05	0.08	○ ○ – – – – – – – – –	○ – – – – – – – – – – –	W1	○ ○ – – – – – – –	○ – – – – –	○ – – – –
6608.0	0.21	**745**	<0.05	0.09	○ ○ – – – – – – – – –	○ – – – – – – – – – – –	W1	○ ○ – – – – – – –	○ – – – – –	○ – – – –
5765.3	0.24	**745**	<0.05	0.11	○ ○ – – – – – – – – –	○ – – – – – – – – – – –	W1	○ ○ – – – – – – –	○ – – – – –	○ – – – –
5057.3	0.28	**745**	<0.05	0.13	○ ○ – – – – – – – – –	○ – – – – – – – – – – –	W1	○ ○ – – – – – – –	○ – – – – –	○ – – – –
4454.3	0.31	**745**	<0.05	0.16	○ ○ – – – – – – – – –	○ – – – – – – – – – – –	W1	○ ○ – – – – – – –	○ – – – – –	○ – – – –
3916.8	0.36	**745**	<0.05	0.08	○ ○ – – – – – – – – –	○ – – – – – – – – – – –	W1	○ ○ – – – – – – –	○ – – – – –	○ – – – –
3361.5	0.42	**745**	<0.05	0.09	○ ○ – – – – – – – – –	○ – – – – – – – – – – –	W1	○ ○ – – – – – – –	○ – – – – –	○ – – – –
2911.9	0.48	**745**	<0.05	0.11	○ ○ – – – – – – – – –	○ – – – – – – – – – – –	W1	○ ○ – – – – – – –	○ – – – – –	○ – – – –
2540.6	0.55	**745**	<0.05	0.14	○ ○ – – – – – – – – –	○ – – – – – – – – – – –	W1	○ ○ – – – – – – –	○ – – – – –	○ – – – –

Helical bevel gear units K

i	n2 (n1=1400) [1/min]	T2max [Nm]	P1max [kW]	Jg [kgcm²]	Three phase motor DM/DA 63 71 80 90 100 112 132 160 180 200 225	Servo motor TA 31 32 33 41 42 43 51 52 53 61 62 63	-W	Motor adapter -M IEC 63 71 80 90 100 112 132 160 180	-M NEMA 56 140 180 210 250 280	-M S 70 90 110 140 190
K43G12										
2261.4	0.62	**745**	<0.05	0.07	○ ○ – – – – – – – – – –	○ – – – – – – – – – – – –	W1	○ ○ – – – – – – –	○ – – – – –	○ – – – –
1932.0	0.72	**745**	0.06	0.11	○ ○ – – – – – – – – – –	○ – – – – – – – – – – – –	W1	○ ○ – – – – – – –	○ – – – – –	○ – – – –
1672.0	0.84	**745**	0.07	0.13	○ ○ – – – – – – – – – –	○ – – – – – – – – – – – –	W1	○ ○ – – – – – – –	○ – – – – –	○ – – – –
1461.5	0.96	**745**	0.07	0.15	○ ○ – – – – – – – – – –	○ – – – – – – – – – – – –	W1	○ ○ – – – – – – –	○ – – – – –	○ – – – –
1287.6	1.1	**745**	0.08	0.17	○ ○ – – – – – – – – – –	○ – – – – – – – – – – – –	W1	○ ○ – – – – – – –	○ – – – – –	○ – – – –
1141.5	1.2	**745**	0.10	0.20	○ ○ – – – – – – – – – –	○ – – – – – – – – – – – –	W1	○ ○ – – – – – – –	○ – – – – –	○ – – – –
1017.0	1.4	**745**	0.11	0.25	○ ○ – – – – – – – – – –	○ – – – – – – – – – – – –	W1	○ ○ – – – – – – –	○ – – – – –	○ – – – –
912.99	1.5	**745**	0.12	0.27	○ ○ – – – – – – – – – –	○ – – – – – – – – – – – –	W1	○ ○ – – – – – – –	○ – – – – –	○ – – – –
796.88	1.8	**745**	0.14	0.34	○ ○ – – – – – – – – – –	○ – – – – – – – – – – – –	W1	○ ○ – – – – – – –	○ – – – – –	○ – – – –
697.97	2.0	**745**	0.16	0.40	○ ○ – – – – – – – – – –	○ – – – – – – – – – – – –	W1	○ ○ – – – – – – –	○ – – – – –	○ – – – –
641.52	2.2	**745**	0.17	0.20	○ ○ – – – – – – – – – –	○ – – – – – – – – – – – –	W1	○ ○ – – – – – – –	○ – – – – –	○ – – – –
565.19	2.5	**745**	0.19	0.23	○ ○ ○ – – – – – – – – –	○ – – – – – – – – – – – –	W1	○ ○ ○ – – – – – –	○ ○ – – – –	○ ○ – – –
501.06	2.8	**745**	0.22	0.28	○ ○ ○ – – – – – – – – –	○ – – – – – – – – – – – –	W1	○ ○ ○ – – – – – –	○ ○ – – – –	○ ○ – – –
446.44	3.1	**745**	0.24	0.34	○ ○ ○ – – – – – – – – –	○ – – – – – – – – – – – –	W1	○ ○ ○ – – – – – –	○ ○ – – – –	○ ○ – – –
400.77	3.5	**745**	0.27	0.39	○ ○ ○ – – – – – – – – –	○ – – – – – – – – – – – –	W1	○ ○ ○ – – – – – –	○ ○ – – – –	○ ○ – – –
349.80	4.0	**745**	0.31	0.50	○ ○ ○ – – – – – – – – –	○ ○ – – – – – – – – – – –	W1	○ ○ ○ – – – – – –	○ ○ – – – –	○ ○ – – –
306.38	4.6	**745**	0.36	0.61	○ ○ ○ – – – – – – – – –	○ ○ – – – – – – – – – – –	W1	○ ○ ○ – – – – – –	○ ○ – – – –	○ ○ – – –
275.54	5.1	**745**	0.40	0.61	○ ○ ○ ○ – – – – – – – –	○ ○ – – – – – – – – – – –	W1	○ ○ ○ ○ – – – – –	○ ○ – – – –	○ ○ ○ – –
249.26	5.6	**745**	0.44	0.63	○ ○ ○ ○ – – – – – – – –	○ ○ ○ – – – – – – – – –	W1	○ ○ ○ ○ – – – – –	○ ○ – – – –	○ ○ ○ – –
227.20	6.2	**745**	0.48	0.63	○ ○ ○ ○ – – – – – – – –	○ ○ ○ – – – – – – – – –	W1	○ ○ ○ ○ – – – – –	○ ○ – – – –	○ ○ ○ – –
202.69	6.9	**745**	0.54	0.64	○ ○ ○ ○ – – – – – – – –	○ ○ ○ – – – – – – – – –	W1	○ ○ ○ ○ – – – – –	○ ○ – – – –	○ ○ ○ – –
181.81	7.7	**745**	0.60	0.65	○ ○ ○ ○ – – – – – – – –	○ ○ ○ – – – – – – – – –	W2	○ ○ ○ ○ – – – – –	○ ○ – – – –	○ ○ ○ – –
164.95	8.5	**745**	0.66	0.68	○ ○ ○ ○ – – – – – – – –	○ ○ ○ – – – – – – – – –	W2	○ ○ ○ ○ – – – – –	○ ○ – – – –	○ ○ ○ – –
146.17	9.6	**745**	0.75	0.70	○ ○ ○ ○ – – – – – – – –	○ ○ ○ – – – – – – – – –	W2	○ ○ ○ ○ – – – – –	○ ○ – – – –	○ ○ ○ – –
128.66	11	**745**	0.85	0.73	○ ○ ○ ○ – – – – – – – –	○ ○ ○ ○ – – – – – – – –	W2	○ ○ ○ ○ – – – – –	○ ○ – – – –	○ ○ ○ – –
K43										
151.92	9.2	**745**	0.72	0.22	○ ○ – – – – – – – – – –	○ – – – – – – – – – – – –	W1	○ ○ – – – – – – –	○ – – – – –	○ – – – –
131.28	11	**745**	0.83	0.32	○ ○ – – – – – – – – – –	○ – – – – – – – – – – – –	W1	○ ○ – – – – – – –	○ – – – – –	○ – – – –
114.99	12	**745**	0.95	0.38	○ ○ ○ – – – – – – – – –	○ ○ ○ ○ – – – – – – – –	W2	○ ○ ○ – – – – – –	○ ○ – – – –	○ ○ – – –
101.80	14	**745**	1.07	0.45	○ ○ ○ ○ – – – – – – – –	○ ○ ○ ○ ○ – – – – – – –	W2	○ ○ ○ ○ – – – – –	○ ○ – – – –	○ ○ ○ – –
90.90	15	**745**	1.20	0.51	○ ○ ○ ○ ○ – – – – – –	○ ○ ○ ○ ○ – – – – – – –	W2	○ ○ ○ ○ ○ – – – –	○ ○ ○ – – –	○ ○ ○ ○ –
81.75	17	**745**	1.33	0.58	○ ○ ○ ○ ○ – – – – – –	○ ○ ○ ○ ○ ○ – – – – –	W2	○ ○ ○ ○ ○ – – – –	○ ○ ○ – – –	○ ○ ○ ○ –
73.96	19	**745**	1.47	0.75	○ ○ ○ ○ ○ – – – – – –	○ ○ ○ ○ ○ ○ ○ – – – – –	W2	○ ○ ○ ○ ○ – – – –	○ ○ ○ – – –	○ ○ ○ ○ –
67.41	21	**745**	1.62	0.82	○ ○ ○ ○ ○ ○ – – – – –	○ ○ ○ ○ ○ ○ ○ – – – – –	W2	○ ○ ○ ○ ○ ○ – – –	○ ○ ○ – – –	○ ○ ○ ○ –
60.14	23	**745**	1.81	0.93	○ ○ ○ ○ ○ ○ – – – – –	○ ○ ○ ○ ○ ○ ○ – – – – –	W3	○ ○ ○ ○ ○ ○ – – –	○ ○ ○ – – –	○ ○ ○ ○ –
53.94	26	**745**	2.02	1.0	○ ○ ○ ○ ○ ○ – – – – –	○ ○ ○ ○ ○ ○ ○ ○ – – – –	W3	○ ○ ○ ○ ○ ○ – – –	○ ○ ○ – – –	○ ○ ○ ○ –
48.94	29	**745**	2.23	1.3	– – – ○ ○ ○ – – – – –	– – – – ○ ○ ○ ○ – – – –	W3	– – ○ ○ ○ ○ – – –	– ○ ○ – – –	– ○ ○ ○ –
43.37	32	**745**	2.51	1.5	– – – ○ ○ ○ – – – – –	– – – – ○ ○ ○ ○ ○ – – –	W3	– – ○ ○ ○ ○ – – –	– ○ ○ – – –	– ○ ○ ○ –
38.17	37	**745**	2.85	1.9	– – – ○ ○ ○ – – – – –	– – – – ○ ○ ○ ○ ○ – – –	W3	– – ○ ○ ○ ○ – – –	– ○ ○ – – –	– ○ ○ ○ –
33.43	42	**745**	3.26	2.4	– – – ○ ○ ○ ○ – – – –	– – – – ○ ○ ○ ○ ○ – – –	W3	– – ○ ○ ○ ○ ○ – –	– ○ ○ ○ – –	– ○ ○ ○ ○
29.37	48	**745**	3.71	2.6	– – – – ○ ○ ○ – – – –	– – – – – – ○ ○ ○ – – –	W3	– – – – ○ ○ ○ – –	– – ○ ○ – –	– – – ○ ○
25.56	55	**745**	4.26	1.4	○ ○ ○ ○ ○ ○ – – – – –	○ ○ ○ ○ ○ ○ ○ ○ – – –	W3	○ ○ ○ ○ ○ ○ – – –	○ ○ ○ – – –	○ ○ ○ ○ –
23.30	60	**745**	4.67	1.6	○ ○ ○ ○ ○ ○ – – – – –	○ ○ ○ ○ ○ ○ ○ ○ ○ – – –	W3	○ ○ ○ ○ ○ ○ – – –	○ ○ ○ – – –	○ ○ ○ ○ –
20.79	67	**745**	5.2	1.9	○ ○ ○ ○ ○ ○ ○ – – – –	○ ○ ○ ○ ○ ○ ○ ○ ○ – – –	W4	○ ○ ○ ○ ○ ○ ○ – –	○ ○ ○ ○ – –	○ ○ ○ ○ ○
18.65	75	**745**	5.8	2.2	○ ○ ○ ○ ○ ○ ○ – – – –	○ ○ ○ ○ ○ ○ ○ ○ ○ – – –	W4	○ ○ ○ ○ ○ ○ ○ – –	○ ○ ○ ○ – –	○ ○ ○ ○ ○
16.92	83	**745**	6.4	2.7	– – – ○ ○ ○ ○ – – – –	– – – – ○ ○ ○ ○ ○ – – –	W4	– – ○ ○ ○ ○ ○ – –	– ○ ○ ○ – –	– ○ ○ ○ ○
14.99	93	**745**	7.3	3.3	– – – ○ ○ ○ ○ – – – –	– – – – ○ ○ ○ ○ ○ – – –	W4	– – ○ ○ ○ ○ ○ – –	– ○ ○ ○ – –	– ○ ○ ○ ○
13.20	106	**745**	7.5	4.2	– – – ○ ○ ○ ○ – – – –	– – – – ○ ○ ○ ○ ○ – – –	W4	– – ○ ○ ○ ○ ○ – –	– ○ ○ ○ – –	– ○ ○ ○ ○
11.56	121	**745**	7.5	5.4	– – – ○ ○ ○ ○ – – – –	– – – – ○ ○ ○ ○ ○ – – –	W4	– – ○ ○ ○ ○ ○ – –	– ○ ○ ○ – –	– ○ ○ ○ ○
10.15	138	**745**	7.5	6.5	– – – – ○ ○ ○ – – – –	– – – – – – ○ ○ ○ – – –	W4	– – – – ○ ○ ○ – –	– – ○ ○ – –	– – – ○ ○
8.60	163	**565**	7.5	3.0	– – – ○ ○ ○ ○ – – – –	– – – – ○ ○ ○ ○ ○ – – –	W4	– – ○ ○ ○ ○ ○ – –	– ○ ○ ○ – –	– ○ ○ ○ ○
7.62	184	**550**	7.5	3.7	– – – ○ ○ ○ ○ – – – –	– – – – ○ ○ ○ ○ ○ – – –	W4	– – ○ ○ ○ ○ ○ – –	– ○ ○ ○ – –	– ○ ○ ○ ○
6.71	209	**580**	7.5	4.7	– – – ○ ○ ○ ○ – – – –	– – – – ○ ○ ○ ○ ○ – – –	W4	– – ○ ○ ○ ○ ○ – –	– ○ ○ ○ – –	– ○ ○ ○ ○
5.87	238	**550**	7.5	6.1	– – – ○ ○ ○ ○ – – – –	– – – – ○ ○ ○ ○ ○ – – –	W4	– – ○ ○ ○ ○ ○ – –	– ○ ○ ○ – –	– ○ ○ ○ ○
5.16	271	**520**	7.5	7.4	– – – – ○ ○ ○ – – – –	– – – – – – ○ ○ ○ – – –	W4	– – – – ○ ○ ○ – –	– – ○ ○ – –	– – – ○ ○

Helical bevel gear units K

i	n2 (n1=1400) [1/min]	T2max [Nm]	P1max [kW]	Jg [kgcm²]	Three phase motor DM/DA 63 71 80 90 100 112 132 160 180 200 225	Servo motor TA 31 32 33 41 42 43 51 52 53 61 62 63	-W	Motor adapter -M IEC 63 71 80 90 100 112 132 160 180	-M NEMA 56 140 180 210 250 280	-M S 70 90 110 140 190
K53G23										
11426	0.12	**1430**	<0.05	0.07	○ ○ – – – – – – – – –	○ – – – – – – – – – – –	W1	○ ○ – – – – – – –	○ – – – – –	○ – – – –
9761.9	0.14	**1430**	<0.05	0.10	○ ○ – – – – – – – – –	○ – – – – – – – – – – –	W1	○ ○ – – – – – – –	○ – – – – –	○ – – – –
8447.9	0.17	**1430**	<0.05	0.12	○ ○ – – – – – – – – –	○ – – – – – – – – – – –	W1	○ ○ – – – – – – –	○ – – – – –	○ – – – –
7384.3	0.19	**1430**	<0.05	0.14	○ ○ – – – – – – – – –	○ – – – – – – – – – – –	W1	○ ○ – – – – – – –	○ – – – – –	○ – – – –
6505.6	0.22	**1430**	<0.05	0.16	○ ○ – – – – – – – – –	○ – – – – – – – – – – –	W1	○ ○ – – – – – – –	○ – – – – –	○ – – – –
5767.5	0.24	**1430**	<0.05	0.18	○ ○ – – – – – – – – –	○ – – – – – – – – – – –	W1	○ ○ – – – – – – –	○ – – – – –	○ – – – –
5175.3	0.27	**1430**	<0.05	0.13	○ ○ – – – – – – – – –	○ – – – – – – – – – – –	W1	○ ○ – – – – – – –	○ – – – – –	○ – – – –
4523.7	0.31	**1430**	<0.05	0.15	○ ○ – – – – – – – – –	○ – – – – – – – – – – –	W1	○ ○ – – – – – – –	○ – – – – –	○ – – – –
3985.4	0.35	**1430**	0.05	0.18	○ ○ – – – – – – – – –	○ – – – – – – – – – – –	W1	○ ○ – – – – – – –	○ – – – – –	○ – – – –
3533.2	0.40	**1430**	0.06	0.20	○ ○ – – – – – – – – –	○ – – – – – – – – – – –	W1	○ ○ – – – – – – –	○ – – – – –	○ – – – –
3093.4	0.45	**1430**	0.07	0.17	○ ○ – – – – – – – – –	○ – – – – – – – – – – –	W1	○ ○ – – – – – – –	○ – – – – –	○ – – – –
2725.3	0.51	**1430**	0.08	0.20	○ ○ – – – – – – – – –	○ – – – – – – – – – – –	W1	○ ○ – – – – – – –	○ – – – – –	○ – – – –
2416.1	0.58	**1430**	0.09	0.23	○ ○ – – – – – – – – –	○ – – – – – – – – – – –	W1	○ ○ – – – – – – –	○ – – – – –	○ – – – –
K53G22										
2176.4	0.64	**1430**	0.10	0.14	○ ○ – – – – – – – – –	○ – – – – – – – – – – –	W1	○ ○ – – – – – – –	○ – – – – –	○ – – – –
1868.5	0.75	**1430**	0.11	0.17	○ ○ – – – – – – – – –	○ – – – – – – – – – – –	W1	○ ○ – – – – – – –	○ – – – – –	○ – – – –
1625.3	0.86	**1430**	0.13	0.22	○ ○ – – – – – – – – –	○ – – – – – – – – – – –	W1	○ ○ – – – – – – –	○ – – – – –	○ – – – –
1428.5	0.98	**1430**	0.15	0.26	○ ○ – – – – – – – – –	○ – – – – – – – – – – –	W1	○ ○ – – – – – – –	○ – – – – –	○ – – – –
1266.0	1.1	**1430**	0.17	0.30	○ ○ – – – – – – – – –	○ – – – – – – – – – – –	W1	○ ○ – – – – – – –	○ – – – – –	○ – – – –
1129.4	1.2	**1430**	0.19	0.34	○ ○ ○ – – – – – – – –	○ – – – – – – – – – – –	W1	○ ○ ○ – – – – – –	○ ○ – – – –	○ ○ – – –
1013.0	1.4	**1430**	0.21	0.39	○ ○ ○ – – – – – – – –	○ – – – – – – – – – – –	W1	○ ○ ○ – – – – – –	○ ○ – – – –	○ ○ – – –
920.69	1.5	**1430**	0.23	0.46	○ ○ ○ – – – – – – – –	○ – – – – – – – – – – –	W1	○ ○ ○ – – – – – –	○ ○ – – – –	○ ○ – – –
811.74	1.7	**1430**	0.26	0.53	○ ○ ○ – – – – – – – –	○ – – – – – – – – – – –	W1	○ ○ ○ – – – – – –	○ ○ – – – –	○ ○ – – –
718.94	1.9	**1430**	0.29	0.65	○ ○ ○ – – – – – – – –	○ – – – – – – – – – – –	W1	○ ○ ○ – – – – – –	○ ○ – – – –	○ ○ – – –
648.83	2.2	**1430**	0.32	0.65	○ ○ ○ – – – – – – – –	○ ○ – – – – – – – – – –	W1	○ ○ ○ – – – – – –	○ ○ – – – –	○ ○ – – –
597.22	2.3	**1430**	0.35	0.66	○ ○ ○ – – – – – – – –	○ ○ – – – – – – – – – –	W1	○ ○ ○ – – – – – –	○ ○ – – – –	○ ○ – – –
524.36	2.7	**1430**	0.40	0.47	○ ○ ○ ○ – – – – – – –	○ ○ – – – – – – – – – –	W1	○ ○ ○ ○ – – – – –	○ ○ – – – –	○ ○ ○ – –
470.34	3.0	**1430**	0.45	0.55	○ ○ ○ ○ – – – – – – –	○ ○ ○ – – – – – – – – –	W1	○ ○ ○ ○ – – – – –	○ ○ – – – –	○ ○ ○ – –
427.46	3.3	**1430**	0.49	0.65	○ ○ ○ ○ – – – – – – –	○ ○ ○ – – – – – – – – –	W1	○ ○ ○ ○ – – – – –	○ ○ – – – –	○ ○ ○ – –
376.88	3.7	**1430**	0.56	0.78	○ ○ ○ ○ – – – – – – –	○ ○ ○ – – – – – – – – –	W1	○ ○ ○ ○ – – – – –	○ ○ – – – –	○ ○ ○ – –
333.79	4.2	**1430**	0.63	0.97	○ ○ ○ ○ – – – – – – –	○ ○ ○ – – – – – – – – –	W2	○ ○ ○ ○ – – – – –	○ ○ – – – –	○ ○ ○ – –
301.24	4.6	**1430**	0.69	0.98	○ ○ ○ ○ – – – – – – –	○ ○ ○ – – – – – – – – –	W2	○ ○ ○ ○ – – – – –	○ ○ – – – –	○ ○ ○ – –
277.28	5.0	**1430**	0.75	1.0	○ ○ ○ ○ ○ – – – – – –	○ ○ ○ ○ – – – – – – – –	W2	○ ○ ○ ○ ○ – – – –	○ ○ ○ – – –	○ ○ ○ ○ –
247.82	5.6	**1430**	0.84	1.0	○ ○ ○ ○ ○ – – – – – –	○ ○ ○ ○ – – – – – – – –	W2	○ ○ ○ ○ ○ – – – –	○ ○ ○ – – –	○ ○ ○ ○ –
220.06	6.4	**1430**	0.95	1.0	○ ○ ○ ○ ○ – – – – – –	○ ○ ○ ○ – – – – – – – –	W2	○ ○ ○ ○ ○ – – – –	○ ○ ○ – – –	○ ○ ○ ○ –
195.01	7.2	**1430**	1.07	1.1	○ ○ ○ ○ ○ – – – – – –	○ ○ ○ ○ ○ – – – – – – –	W2	○ ○ ○ ○ ○ – – – –	○ ○ ○ – – –	○ ○ ○ ○ –
173.54	8.1	**1430**	1.21	1.1	○ ○ ○ ○ ○ – – – – – –	○ ○ ○ ○ ○ – – – – – – –	W2	○ ○ ○ ○ ○ – – – –	○ ○ ○ – – –	○ ○ ○ ○ –
148.66	9.4	**1430**	1.41	1.2	○ ○ ○ ○ ○ – – – – – –	○ ○ ○ ○ ○ ○ ○ – – – – –	W2	○ ○ ○ ○ ○ – – – –	○ ○ ○ – – –	○ ○ ○ ○ –
135.16	10	**1430**	1.55	1.7	– – – ○ ○ ○ – – – – –	– – – – ○ ○ ○ – – – – –	W2	– – ○ ○ ○ ○ – – –	– ○ ○ – – –	– ○ ○ ○ –

Helical bevel gear units K

i	n2 (n1=1400) [1/min]	T2max [Nm]	P1max [kW]	Jg [kgcm²]	Three phase motor DM/DA 63	71	80	90	100	112	132	160	180	200	225	Servo motor TA 31	32	33	41	42	43	51	52	53	61	62	63	-W	Motor adapter -M IEC 63	71	80	90	100	112	132	160	180	-M NEMA 56	140	180	210	250	280	-M S 70	90	110	140	190
K53																																															
138.94	10	**1430**	1.51	0.72	–	○	○	–	–	–	–	–	–	–	–	–	–	–	○	–	–	–	–	–	–	–	–	W2	○	○	○	–	–	–	–	–	○	○	–	–	–	–	○	○	–	–
123.46	11	**1430**	1.70	0.86	–	○	○	○	–	–	–	–	–	–	–	–	–	–	○	○	○	–	–	–	–	–	–	W2	○	○	○	○	–	–	–	–	○	○	–	–	–	–	○	○	○	–
110.68	13	**1430**	1.89	0.96	–	○	○	○	○	–	–	–	–	–	–	–	–	–	○	○	○	○	–	–	–	–	–	W3	○	○	○	○	○	–	–	–	–	○	○	○	–	–	–	○	○	○	○
99.94	14	**1430**	2.09	1.1	–	○	○	○	○	○	–	–	–	–	–	–	–	–	○	○	○	○	○	–	–	–	–	W3	○	○	○	○	○	○	–	–	–	○	○	○	–	–	–	○	○	○	○
90.79	15	**1430**	2.31	1.3	–	○	○	○	○	○	–	–	–	–	–	–	–	–	○	○	○	○	○	○	–	–	–	W3	○	○	○	○	○	○	–	–	–	○	○	○	–	–	–	○	○	○	○
83.01	17	**1430**	2.52	1.4	–	○	○	○	○	○	–	–	–	–	–	–	–	–	○	○	○	○	○	○	–	–	–	W3	○	○	○	○	○	○	–	–	–	○	○	○	–	–	–	○	○	○	○
74.48	19	**1430**	2.81	1.6	–	○	○	○	○	○	–	–	–	–	–	–	–	–	○	○	○	○	○	○	–	–	–	W3	○	○	○	○	○	○	–	–	–	○	○	○	–	–	–	○	○	○	○
67.22	21	**1430**	3.11	1.8	–	○	○	○	○	○	○	–	–	–	–	–	–	–	○	○	○	○	○	○	–	–	–	W3	○	○	○	○	○	○	○	–	–	○	○	○	○	–	–	○	○	○	○
61.87	23	**1430**	3.38	2.3	–	–	–	○	○	○	○	–	–	–	–	–	–	–	–	○	○	○	○	○	–	–	–	W3	–	–	○	○	○	○	○	–	–	–	○	○	○	–	–	–	○	○	○	○
55.30	25	**1430**	3.79	2.6	–	–	–	○	○	○	○	–	–	–	–	–	–	–	–	○	○	○	○	○	–	–	–	W3	–	–	○	○	○	○	○	–	–	–	○	○	○	–	–	–	○	○	○	○
49.10	29	**1430**	4.26	2.9	–	–	–	○	○	○	○	○	–	–	–	–	–	–	–	○	○	○	○	○	○	–	–	W3	–	–	○	○	○	○	○	–	–	–	○	○	○	–	–	–	○	○	○	○
43.51	32	**1430**	4.81	3.8	–	–	–	○	○	○	○	○	–	–	–	–	–	–	–	○	○	○	○	○	○	–	–	W4	–	–	○	○	○	○	○	–	–	–	○	○	○	–	–	–	○	○	○	○
38.72	36	**1430**	5.4	4.2	–	–	–	–	○	○	○	○	–	–	–	–	–	–	–	–	–	–	○	○	○	○	–	W4	–	–	–	–	○	○	○	–	–	–	–	○	○	–	–	–	–	–	–	○	○
33.17	42	**1430**	6.3	6.3	–	–	–	–	–	–	–	○	○	–	–	–	–	–	–	–	–	–	–	–	–	○	○	W4	–	–	–	–	–	–	–	○	–	–	–	–	–	○	–	–	–	–	–	–	○
29.56	47	**1430**	7.1	2.5	–	○	○	○	○	○	○	–	–	–	–	–	–	–	○	○	○	○	○	○	○	○	–	W4	○	○	○	○	○	○	○	–	–	○	○	○	○	–	–	○	○	○	○
26.68	52	**1430**	7.8	2.9	–	○	○	○	○	○	○	–	–	–	–	–	–	–	○	○	○	○	○	○	○	○	–	W4	○	○	○	○	○	○	○	–	–	○	○	○	○	–	–	○	○	○	○
24.56	57	**1430**	8.5	3.6	–	–	–	○	○	○	○	–	–	–	–	–	–	–	○	○	○	○	○	○	○	○	–	W4	–	–	○	○	○	○	○	–	–	–	○	○	○	–	–	–	○	○	○	○
21.95	64	**1430**	9.5	4.2	–	–	–	○	○	○	○	○	–	–	–	–	–	–	○	○	○	○	○	○	○	○	○	W4	–	–	○	○	○	○	○	–	–	–	○	○	○	–	–	–	○	○	○	○
19.49	72	**1420**	10.7	5.0	–	–	–	○	○	○	○	○	–	–	–	–	–	–	○	○	○	○	○	○	○	○	○	W4	–	–	○	○	○	○	○	–	–	–	○	○	○	–	–	–	○	○	○	○
17.27	81	**1370**	11.6	6.4	–	–	–	○	○	○	○	○	–	–	–	–	–	–	○	○	○	○	○	○	○	○	○	W4	–	–	○	○	○	○	○	–	–	–	○	○	○	–	–	–	○	○	○	○
15.37	91	**1320**	12.6	7.5	–	–	–	–	○	○	○	○	–	–	–	–	–	–	–	–	–	–	○	○	○	○	○	W4	–	–	–	–	○	○	○	–	–	–	–	○	○	–	–	–	–	–	–	○	○
13.17	106	**1260**	14.0	10.7	–	–	–	–	–	–	–	○	○	–	–	–	–	–	–	–	–	–	–	–	–	○	○	W4	–	–	–	–	–	–	–	○	–	–	–	–	–	○	–	–	–	–	–	–	○
11.61	121	**1220**	15.0	13.3	–	–	–	–	–	–	–	○	○	–	–	–	–	–	–	–	–	–	–	–	–	○	○	W4	–	–	–	–	–	–	–	○	–	–	–	–	–	○	–	–	–	–	–	–	○
10.75	130	**985**	13.4	4.9	–	–	–	○	○	○	○	○	–	–	–	–	–	–	–	○	○	○	○	○	○	○	○	W4	–	–	○	○	○	○	○	–	–	–	○	○	○	–	–	–	○	○	○	○
9.55	147	**985**	15.0	5.9	–	–	–	○	○	○	○	○	–	–	–	–	–	–	–	○	○	○	○	○	○	○	○	W4	–	–	○	○	○	○	○	–	–	–	○	○	○	–	–	–	○	○	○	○
8.46	165	**985**	15.0	7.6	–	–	–	○	○	○	○	○	–	–	–	–	–	–	–	○	○	○	○	○	○	○	○	W4	–	–	○	○	○	○	○	–	–	–	○	○	○	–	–	–	○	○	○	○
7.53	186	**985**	15.0	8.9	–	–	–	–	○	○	○	○	–	–	–	–	–	–	–	–	–	–	○	○	○	○	○	W4	–	–	–	–	○	○	○	–	–	–	–	○	○	–	–	–	–	–	–	○	○
6.45	217	**960**	15.0	12.7	–	–	–	–	–	–	–	○	○	–	–	–	–	–	–	–	–	–	–	–	–	○	○	W4	–	–	–	–	–	–	–	○	–	–	–	–	–	○	–	–	–	–	–	–	○
5.69	246	**925**	15.0	15.8	–	–	–	–	–	–	–	○	○	–	–	–	–	–	–	–	–	–	–	–	–	○	○	W4	–	–	–	–	–	–	–	○	–	–	–	–	–	○	–	–	–	–	–	–	○

Helical bevel gear units K

i	n2 (n1=1400) [1/min]	T2max [Nm]	P1max [kW]	Jg [kgcm²]	Three phase motor DM/DA 63	71	80	90	100	112	132	160	180	200	225	Servo motor TA 31	32	33	41	42	43	51	52	53	61	62	63	-W	Motor adapter -M IEC 63	71	80	90	100	112	132	160	180	-M NEMA 56	140	180	210	250	280	-M S 70	90	110	140	190
K63G23																																																	
13818	0.10	**2550**	<0.05	0.07	○	○	–	–	–	–	–	–	–	–	–	○	–	–	–	–	–	–	–	–	–	–	–	W1	○	○	–	–	–	–	–	–	○	–	–	–	–	–	○	–	–	–	–
11805	0.12	**2550**	<0.05	0.10	○	○	–	–	–	–	–	–	–	–	–	○	–	–	–	–	–	–	–	–	–	–	–	W1	○	○	–	–	–	–	–	–	○	–	–	–	–	–	○	–	–	–	–
10216	0.14	**2550**	<0.05	0.12	○	○	–	–	–	–	–	–	–	–	–	○	–	–	–	–	–	–	–	–	–	–	–	W1	○	○	–	–	–	–	–	–	○	–	–	–	–	–	○	–	–	–	–
8930.1	0.16	**2550**	<0.05	0.14	○	○	–	–	–	–	–	–	–	–	–	○	–	–	–	–	–	–	–	–	–	–	–	W1	○	○	–	–	–	–	–	–	○	–	–	–	–	–	○	–	–	–	–
7867.5	0.18	**2550**	<0.05	0.16	○	○	–	–	–	–	–	–	–	–	–	○	–	–	–	–	–	–	–	–	–	–	–	W1	○	○	–	–	–	–	–	–	○	–	–	–	–	–	○	–	–	–	–
6974.9	0.20	**2550**	0.05	0.18	○	○	–	–	–	–	–	–	–	–	–	○	–	–	–	–	–	–	–	–	–	–	–	W1	○	○	–	–	–	–	–	–	○	–	–	–	–	–	○	–	–	–	–
6258.7	0.22	**2550**	0.06	0.13	○	○	–	–	–	–	–	–	–	–	–	○	–	–	–	–	–	–	–	–	–	–	–	W1	○	○	–	–	–	–	–	–	○	–	–	–	–	–	○	–	–	–	–
5470.7	0.26	**2550**	0.07	0.15	○	○	–	–	–	–	–	–	–	–	–	○	–	–	–	–	–	–	–	–	–	–	–	W1	○	○	–	–	–	–	–	–	○	–	–	–	–	–	○	–	–	–	–
4819.7	0.29	**2550**	0.08	0.18	○	○	–	–	–	–	–	–	–	–	–	○	–	–	–	–	–	–	–	–	–	–	–	W1	○	○	–	–	–	–	–	–	○	–	–	–	–	–	○	–	–	–	–
4272.9	0.33	**2550**	0.09	0.20	○	○	–	–	–	–	–	–	–	–	–	○	–	–	–	–	–	–	–	–	–	–	–	W1	○	○	–	–	–	–	–	–	○	–	–	–	–	–	○	–	–	–	–
3741.0	0.37	**2550**	0.10	0.17	○	○	–	–	–	–	–	–	–	–	–	○	–	–	–	–	–	–	–	–	–	–	–	W1	○	○	–	–	–	–	–	–	○	–	–	–	–	–	○	–	–	–	–
3295.8	0.42	**2550**	0.11	0.20	○	○	–	–	–	–	–	–	–	–	–	○	–	–	–	–	–	–	–	–	–	–	–	W1	○	○	–	–	–	–	–	–	○	–	–	–	–	–	○	–	–	–	–
2921.9	0.48	**2550**	0.13	0.23	○	○	–	–	–	–	–	–	–	–	–	○	–	–	–	–	–	–	–	–	–	–	–	W1	○	○	–	–	–	–	–	–	○	–	–	–	–	–	○	–	–	–	–
K63G22																																																	
2632.0	0.53	**2550**	0.14	0.14	○	○	–	–	–	–	–	–	–	–	–	○	–	–	–	–	–	–	–	–	–	–	–	W1	○	○	–	–	–	–	–	–	○	–	–	–	–	–	○	–	–	–	–
2259.6	0.62	**2550**	0.17	0.17	○	○	–	–	–	–	–	–	–	–	–	○	–	–	–	–	–	–	–	–	–	–	–	W1	○	○	–	–	–	–	–	–	○	–	–	–	–	–	○	–	–	–	–
1965.6	0.71	**2550**	0.19	0.22	○	○	○	–	–	–	–	–	–	–	–	○	–	–	–	–	–	–	–	–	–	–	–	W1	○	○	○	–	–	–	–	–	–	○	○	–	–	–	–	○	○	–	–	–
1727.6	0.81	**2550**	0.22	0.26	○	○	○	–	–	–	–	–	–	–	–	○	–	–	–	–	–	–	–	–	–	–	–	W1	○	○	○	–	–	–	–	–	–	○	○	–	–	–	–	○	○	–	–	–
1531.0	0.91	**2550**	0.24	0.31	○	○	○	–	–	–	–	–	–	–	–	○	–	–	–	–	–	–	–	–	–	–	–	W1	○	○	○	–	–	–	–	–	–	○	○	–	–	–	–	○	○	–	–	–
1365.8	1.0	**2550**	0.27	0.35	○	○	○	–	–	–	–	–	–	–	–	○	–	–	–	–	–	–	–	–	–	–	–	W1	○	○	○	–	–	–	–	–	–	○	○	–	–	–	–	○	○	–	–	–
1225.1	1.1	**2550**	0.31	0.40	○	○	○	–	–	–	–	–	–	–	–	○	○	–	–	–	–	–	–	–	–	–	–	W1	○	○	○	–	–	–	–	–	–	○	○	–	–	–	–	○	○	–	–	–
1113.4	1.3	**2550**	0.34	0.47	○	○	○	–	–	–	–	–	–	–	–	○	○	–	–	–	–	–	–	–	–	–	–	W1	○	○	○	–	–	–	–	–	–	○	○	–	–	–	–	○	○	–	–	–
981.68	1.4	**2550**	0.38	0.55	○	○	○	○	–	–	–	–	–	–	–	○	○	–	–	–	–	–	–	–	–	–	–	W1	○	○	○	○	–	–	–	–	–	○	○	–	–	–	–	○	○	○	–	–
869.44	1.6	**2550**	0.43	0.67	○	○	○	○	–	–	–	–	–	–	–	○	○	○	–	–	–	–	–	–	–	–	–	W1	○	○	○	○	–	–	–	–	–	○	○	–	–	–	–	○	○	○	–	–
803.80	1.7	**2550**	0.47	0.68	○	○	○	○	–	–	–	–	–	–	–	○	○	○	–	–	–	–	–	–	–	–	–	W1	○	○	○	○	–	–	–	–	–	○	○	–	–	–	–	○	○	○	–	–
724.09	1.9	**2550**	0.52	0.68	○	○	○	○	–	–	–	–	–	–	–	○	○	○	–	–	–	–	–	–	–	–	–	W1	○	○	○	○	–	–	–	–	–	○	○	–	–	–	–	○	○	○	–	–
634.13	2.2	**2550**	0.59	0.51	○	○	○	○	–	–	–	–	–	–	–	○	○	○	–	–	–	–	–	–	–	–	–	W2	○	○	○	○	–	–	–	–	–	○	○	–	–	–	–	○	○	○	–	–
568.80	2.5	**2550**	0.66	0.60	○	○	○	○	–	–	–	–	–	–	–	○	○	○	–	–	–	–	–	–	–	–	–	W2	○	○	○	○	–	–	–	–	–	○	○	–	–	–	–	○	○	○	–	–
516.95	2.7	**2550**	0.72	0.72	○	○	○	○	–	–	–	–	–	–	–	○	○	○	–	–	–	–	–	–	–	–	–	W2	○	○	○	○	–	–	–	–	–	○	○	–	–	–	–	○	○	○	–	–
455.78	3.1	**2550**	0.82	0.86	○	○	○	○	○	–	–	–	–	–	–	○	○	○	○	–	–	–	–	–	–	–	–	W2	○	○	○	○	○	–	–	–	–	○	○	○	–	–	–	○	○	○	○	–
403.67	3.5	**2550**	0.93	1.1	○	○	○	○	○	–	–	–	–	–	–	○	○	○	○	–	–	–	–	–	–	–	–	W2	○	○	○	○	○	–	–	–	–	○	○	○	–	–	–	○	○	○	○	–
373.19	3.8	**2550**	1.00	1.1	○	○	○	○	○	–	–	–	–	–	–	○	○	○	○	–	–	–	–	–	–	–	–	W2	○	○	○	○	○	–	–	–	–	○	○	○	–	–	–	○	○	○	○	–
336.18	4.2	**2550**	1.11	1.1	○	○	○	○	○	–	–	–	–	–	–	○	○	○	○	○	–	–	–	–	–	–	–	W2	○	○	○	○	○	–	–	–	–	○	○	○	–	–	–	○	○	○	○	–
301.25	4.6	**2550**	1.24	1.1	○	○	○	○	○	–	–	–	–	–	–	○	○	○	○	○	–	–	–	–	–	–	–	W2	○	○	○	○	○	–	–	–	–	○	○	○	–	–	–	○	○	○	○	–
269.78	5.2	**2550**	1.39	1.2	○	○	○	○	○	–	–	–	–	–	–	○	○	○	○	○	○	○	–	–	–	–	–	W2	○	○	○	○	○	–	–	–	–	○	○	○	–	–	–	○	○	○	○	–
242.80	5.8	**2550**	1.54	1.3	○	○	○	○	○	○	–	–	–	–	–	○	○	○	○	○	○	○	–	–	–	–	–	W2	○	○	○	○	○	○	–	–	–	○	○	○	–	–	–	○	○	○	○	–
234.63	6.0	**2550**	1.59	1.8	–	–	–	○	○	○	–	–	–	–	–	–	–	–	–	○	○	○	–	–	–	–	–	W2	–	–	○	○	○	○	–	–	–	–	○	○	–	–	–	–	○	○	○	–
211.83	6.6	**2550**	1.77	1.4	○	○	○	○	○	○	–	–	–	–	–	○	○	○	○	○	○	○	○	–	–	–	–	W3	○	○	○	○	○	○	–	–	–	○	○	○	–	–	–	○	○	○	○	–
210.12	6.7	**2550**	1.78	1.9	–	–	–	○	○	○	–	–	–	–	–	–	–	–	–	○	○	○	○	–	–	–	–	W3	–	–	○	○	○	○	–	–	–	–	○	○	–	–	–	–	○	○	○	–
189.77	7.4	**2550**	1.97	1.5	○	○	○	○	○	○	–	–	–	–	–	○	○	○	○	○	○	○	○	–	–	–	–	W3	○	○	○	○	○	○	–	–	–	○	○	○	–	–	–	○	○	○	○	–
189.10	7.4	**2550**	1.98	2.0	–	–	–	○	○	○	–	–	–	–	–	–	–	–	–	○	○	○	○	–	–	–	–	W3	–	–	○	○	○	○	–	–	–	–	○	○	–	–	–	–	○	○	○	–

Helical bevel gear units K

i	n2 (n1=1400) [1/min]	T2max [Nm]	P1max [kW]	Jg [kgcm²]	Three phase motor DM/DA 63	71	80	90	100	112	132	160	180	200	225	Servo motor TA 31	32	33	41	42	43	51	52	53	61	62	63	-W	Motor adapter -M IEC 63	71	80	90	100	112	132	160	180	-M NEMA 56	140	180	210	250	280	-M S 70	90	110	140	190
K63																																															
160.53	8.7	**2550**	2.33	1.7	–	–	o	o	–	–	–	–	–	–	–	–	–	–	–	–	–	–	–	–	–	–	–	W2	–	–	o	o	–	–	–	–	–	–	o	–	–	–	–	–	–	o	o	–	–
144.48	9.7	**2550**	2.59	2.0	–	–	o	o	o	o	–	–	–	–	–	–	–	–	–	–	–	o	–	–	–	–	–	W3	–	–	o	o	o	o	–	–	–	–	o	o	–	–	–	–	–	o	o	o	–
130.99	11	**2550**	2.86	2.3	–	–	o	o	o	o	o	–	–	–	–	–	–	–	–	–	–	o	o	o	–	–	–	W3	–	–	o	o	o	o	o	–	–	–	o	o	–	–	–	–	–	o	o	o	–
119.50	12	**2550**	3.13	2.6	–	–	o	o	o	o	o	–	–	–	–	–	–	–	–	–	–	o	o	o	–	–	–	W3	–	–	o	o	o	o	o	–	–	–	o	o	–	–	–	–	–	o	o	o	–
109.93	13	**2550**	3.40	2.8	–	–	o	o	o	o	o	–	–	–	–	–	–	–	–	–	–	o	o	o	–	–	–	W3	–	–	o	o	o	o	o	–	–	–	o	o	–	–	–	–	–	o	o	o	–
99.21	14	**2550**	3.77	3.2	–	–	o	o	o	o	o	o	–	–	–	–	–	–	–	–	–	o	o	o	–	–	–	W3	–	–	o	o	o	o	o	o	–	–	o	o	o	–	–	–	–	o	o	o	o
90.07	16	**2550**	4.15	3.6	–	–	o	o	o	o	o	o	–	–	–	–	–	–	–	–	–	o	o	o	o	–	–	W3	–	–	o	o	o	o	o	o	–	–	o	o	o	–	–	–	–	o	o	o	o
83.27	17	**2550**	4.49	4.1	–	–	–	o	o	o	o	–	–	–	–	–	–	–	–	–	–	o	o	o	o	–	–	W4	–	–	o	o	o	o	o	–	–	–	o	o	o	–	–	–	–	o	o	o	o
75.02	19	**2550**	4.99	4.6	–	–	–	o	o	o	o	o	–	–	–	–	–	–	–	–	–	o	o	o	o	–	–	W4	–	–	o	o	o	o	o	o	–	–	o	o	o	o	–	–	–	o	o	o	o
67.22	21	**2550**	5.6	5.0	–	–	–	o	o	o	o	o	–	–	–	–	–	–	–	–	–	o	o	o	o	–	–	W4	–	–	o	o	o	o	o	o	–	–	o	o	o	o	–	–	–	o	o	o	o
60.20	23	**2550**	6.2	6.7	–	–	–	o	o	o	o	o	–	–	–	–	–	–	–	–	–	o	o	o	o	o	–	W4	–	–	o	o	o	o	o	o	–	–	o	o	o	o	–	–	–	o	o	o	o
54.18	26	**2550**	6.9	7.3	–	–	–	–	o	o	o	o	–	–	–	–	–	–	–	–	–	o	o	o	o	o	–	W4	–	–	–	–	o	o	o	o	–	–	–	–	o	o	o	–	–	–	–	o	o	o
47.27	30	**2550**	7.9	9.7	–	–	–	–	–	–	o	o	o	–	–	–	–	–	–	–	–	–	–	–	–	o	o	W4	–	–	–	–	–	–	o	o	o	–	–	–	–	–	o	o	o	–	–	–	–	o
42.35	33	**2550**	8.8	11.2	–	–	–	–	–	–	o	o	o	–	–	–	–	–	–	–	–	–	–	–	–	o	o	W5	–	–	–	–	–	–	o	o	o	–	–	–	–	–	o	o	o	–	–	–	–	o
37.56	37	**2550**	10.0	13.6	–	–	–	–	–	–	–	o	o	o	–	–	–	–	–	–	–	–	–	–	–	o	o	W5	–	–	–	–	–	–	o	o	o	–	–	–	–	–	o	o	o	–	–	–	–	o
33.00	42	**2490**	11.1	16.2	–	–	–	–	–	–	o	o	o	–	–	–	–	–	–	–	–	–	–	–	–	o	o	W5	–	–	–	–	–	–	o	o	o	–	–	–	–	–	o	o	o	–	–	–	–	o
29.77	47	**2550**	12.6	6.9	–	–	–	o	o	o	o	o	–	–	–	–	–	–	–	–	–	o	o	o	o	o	o	W5	–	–	o	o	o	o	o	o	–	–	o	o	o	o	–	–	–	o	o	o	o
26.68	52	**2550**	14.0	7.9	–	–	–	o	o	o	o	o	–	–	–	–	–	–	–	–	–	o	o	o	o	o	o	W5	–	–	o	o	o	o	o	o	–	–	o	o	o	o	–	–	–	o	o	o	o
23.89	59	**2470**	15.2	10.2	–	–	–	o	o	o	o	o	o	–	–	–	–	–	–	–	–	o	o	o	o	o	o	W5	–	–	o	o	o	o	o	o	o	–	o	o	o	o	o	–	–	o	o	o	o
21.50	65	**2390**	16.3	11.7	–	–	–	–	o	o	o	o	o	–	–	–	–	–	–	–	–	o	o	o	o	o	o	W5	–	–	–	–	o	o	o	o	o	–	–	o	o	o	o	o	–	–	–	o	o
18.76	75	**2300**	18.0	15.4	–	–	–	–	–	–	o	o	o	–	–	–	–	–	–	–	–	–	–	–	–	o	o	W5	–	–	–	–	–	–	o	o	o	–	–	–	–	–	o	o	o	–	–	–	–	o
16.81	83	**2220**	19.4	18.3	–	–	–	–	–	–	o	o	o	–	–	–	–	–	–	–	–	–	–	–	–	o	o	W5	–	–	–	–	–	–	o	o	o	–	–	–	–	–	o	o	o	–	–	–	–	o
14.91	94	**2140**	21.0	22.6	–	–	–	–	–	–	o	o	o	o	–	–	–	–	–	–	–	–	–	–	–	o	o	W5	–	–	–	–	–	–	o	o	o	–	–	–	–	–	o	o	o	–	–	–	–	o
13.10	107	**2060**	22.0	27.9	–	–	–	–	–	–	o	o	o	o	–	–	–	–	–	–	–	–	–	–	–	o	o	W5	–	–	–	–	–	–	o	o	o	–	–	–	–	–	o	o	o	–	–	–	–	o
11.58	121	**1700**	21.5	11.7	–	–	–	o	o	o	o	o	o	–	–	–	–	–	–	–	–	o	o	o	o	o	o	W5	–	–	o	o	o	o	o	o	o	–	o	o	o	o	o	–	–	o	o	o	o
10.43	134	**1670**	22.0	13.5	–	–	–	–	o	o	o	o	o	–	–	–	–	–	–	–	–	o	o	o	o	o	o	W5	–	–	–	–	o	o	o	o	o	–	–	o	o	o	o	o	–	–	–	o	o
9.10	154	**1700**	22.0	17.9	–	–	–	–	–	–	o	o	o	o	–	–	–	–	–	–	–	–	–	–	–	o	o	W5	–	–	–	–	–	–	o	o	o	–	–	–	–	–	o	o	o	–	–	–	–	o
8.15	172	**1700**	22.0	21.3	–	–	–	–	–	–	o	o	o	o	–	–	–	–	–	–	–	–	–	–	–	o	o	W5	–	–	–	–	–	–	o	o	o	–	–	–	–	–	o	o	o	–	–	–	–	o
7.23	194	**1640**	22.0	26.5	–	–	–	–	–	–	o	o	o	o	–	–	–	–	–	–	–	–	–	–	–	o	o	W5	–	–	–	–	–	–	o	o	o	–	–	–	–	–	o	o	o	–	–	–	–	o
6.35	220	**1570**	22.0	32.8	–	–	–	–	–	–	o	o	o	o	–	–	–	–	–	–	–	–	–	–	–	o	o	W5	–	–	–	–	–	–	o	o	o	–	–	–	–	–	o	o	o	–	–	–	–	o
K73G33																																															
14283	0.098	**4330**	<0.05	0.13	o	o	–	–	–	–	–	–	–	–	–	o	–	–	–	–	–	–	–	–	–	–	–	W1	o	o	–	–	–	–	–	–	–	o	–	–	–	–	–	–	o	–	–	–	–
12262	0.11	**4330**	0.05	0.15	o	o	–	–	–	–	–	–	–	–	–	o	–	–	–	–	–	–	–	–	–	–	–	W1	o	o	–	–	–	–	–	–	–	o	–	–	–	–	–	–	o	–	–	–	–
10667	0.13	**4330**	0.06	0.20	o	o	–	–	–	–	–	–	–	–	–	o	–	–	–	–	–	–	–	–	–	–	–	W1	o	o	–	–	–	–	–	–	–	o	–	–	–	–	–	–	o	–	–	–	–
9375.1	0.15	**4330**	0.07	0.23	o	o	–	–	–	–	–	–	–	–	–	o	–	–	–	–	–	–	–	–	–	–	–	W1	o	o	–	–	–	–	–	–	–	o	–	–	–	–	–	–	o	–	–	–	–
8308.2	0.17	**4330**	0.08	0.27	o	o	–	–	–	–	–	–	–	–	–	o	–	–	–	–	–	–	–	–	–	–	–	W1	o	o	–	–	–	–	–	–	–	o	–	–	–	–	–	–	o	–	–	–	–
7411.9	0.19	**4330**	0.09	0.30	o	o	–	–	–	–	–	–	–	–	–	o	–	–	–	–	–	–	–	–	–	–	–	W1	o	o	–	–	–	–	–	–	–	o	–	–	–	–	–	–	o	–	–	–	–
6648.4	0.21	**4330**	0.10	0.34	o	o	–	–	–	–	–	–	–	–	–	o	–	–	–	–	–	–	–	–	–	–	–	W1	o	o	–	–	–	–	–	–	–	o	–	–	–	–	–	–	o	–	–	–	–
6042.3	0.23	**4330**	0.11	0.40	o	o	–	–	–	–	–	–	–	–	–	o	–	–	–	–	–	–	–	–	–	–	–	W1	o	o	–	–	–	–	–	–	–	o	–	–	–	–	–	–	o	–	–	–	–
5327.3	0.26	**4330**	0.12	0.45	o	o	–	–	–	–	–	–	–	–	–	o	–	–	–	–	–	–	–	–	–	–	–	W1	o	o	–	–	–	–	–	–	–	o	–	–	–	–	–	–	o	–	–	–	–
4718.2	0.30	**4330**	0.13	0.55	o	o	–	–	–	–	–	–	–	–	–	o	–	–	–	–	–	–	–	–	–	–	–	W1	o	o	–	–	–	–	–	–	–	o	–	–	–	–	–	–	o	–	–	–	–
4280.5	0.33	**4330**	0.15	0.55	o	o	–	–	–	–	–	–	–	–	–	o	–	–	–	–	–	–	–	–	–	–	–	W1	o	o	–	–	–	–	–	–	–	o	–	–	–	–	–	–	o	–	–	–	–
3707.9	0.38	**4330**	0.17	0.55	o	o	–	–	–	–	–	–	–	–	–	o	–	–	–	–	–	–	–	–	–	–	–	W1	o	o	–	–	–	–	–	–	–	o	–	–	–	–	–	–	o	–	–	–	–
3293.4	0.43	**4330**	0.19	0.40	o	o	o	–	–	–	–	–	–	–	–	o	–	–	–	–	–	–	–	–	–	–	–	W1	o	o	o	–	–	–	–	–	–	o	o	–	–	–	–	–	o	o	–	–	–
2954.1	0.47	**4330**	0.21	0.46	o	o	o	–	–	–	–	–	–	–	–	o	–	–	–	–	–	–	–	–	–	–	–	W1	o	o	o	–	–	–	–	–	–	o	o	–	–	–	–	–	o	o	–	–	–
2684.8	0.52	**4330**	0.24	0.55	o	o	o	–	–	–	–	–	–	–	–	o	–	–	–	–	–	–	–	–	–	–	–	W1	o	o	o	–	–	–	–	–	–	o	o	–	–	–	–	–	o	o	–	–	–
2367.1	0.59	**4330**	0.27	0.65	o	o	o	–	–	–	–	–	–	–	–	o	–	–	–	–	–	–	–	–	–	–	–	W1	o	o	o	–	–	–	–	–	–	o	o	–	–	–	–	–	o	o	–	–	–

Helical bevel gear units K

i	n2 (n1=1400) [1/min]	T2max [Nm]	P1max [kW]	Jg [kgcm²]	Three phase motor DM/DA 63 71 80 90 100 112 132 160 180 200 225	Servo motor TA 31 32 33 41 42 43 51 52 53 61 62 63	-W	Motor adapter -M IEC 63 71 80 90 100 112 132 160 180	-M NEMA 56 140 180 210 250 280	-M S 70 90 110 140 190
K73G32										
2068.0	0.68	**4330**	0.31	0.49	○ ○ ○ – – – – – – – – –	○ ○ – – – – – – – – – – –	W1	○ ○ ○ – – – – – –	○ ○ – – – –	○ ○ – – –
1846.7	0.76	**4330**	0.34	0.57	○ ○ ○ – – – – – – – – –	○ ○ – – – – – – – – – – –	W1	○ ○ ○ – – – – – – –	○ ○ – – – –	○ ○ – – –
1660.8	0.84	**4330**	0.38	0.66	○ ○ ○ ○ – – – – – – –	○ ○ – – – – – – – – – – –	W1	○ ○ ○ ○ – – – – –	○ ○ – – – –	○ ○ ○ – –
1502.4	0.93	**4330**	0.42	0.84	○ ○ ○ ○ – – – – – – –	○ ○ – – – – – – – – – – –	W1	○ ○ ○ ○ – – – – –	○ ○ – – – –	○ ○ ○ – –
1369.5	1.0	**4330**	0.46	0.93	○ ○ ○ ○ – – – – – – –	○ ○ ○ – – – – – – – – –	W1	○ ○ ○ ○ – – – – –	○ ○ – – – –	○ ○ ○ – –
1221.7	1.1	**4330**	0.52	1.1	○ ○ ○ ○ – – – – – – –	○ ○ ○ – – – – – – – – –	W1	○ ○ ○ ○ – – – – –	○ ○ – – – –	○ ○ ○ – –
1095.9	1.3	**4330**	0.58	1.2	○ ○ ○ ○ – – – – – – –	○ ○ ○ – – – – – – – – –	W1	○ ○ ○ ○ – – – – –	○ ○ – – – –	○ ○ ○ – –
994.22	1.4	**4330**	0.64	1.2	○ ○ ○ ○ – – – – – – –	○ ○ ○ – – – – – – – – –	W2	○ ○ ○ ○ – – – – –	○ ○ – – – –	○ ○ ○ – –
861.22	1.6	**4330**	0.74	1.3	○ ○ ○ ○ – – – – – – –	○ ○ ○ – – – – – – – – –	W2	○ ○ ○ ○ – – – – –	○ ○ – – – –	○ ○ ○ – –
779.24	1.8	**4330**	0.81	1.3	○ ○ ○ ○ ○ – – – – – –	○ ○ ○ ○ – – – – – – – –	W2	○ ○ ○ ○ ○ – – – –	○ ○ ○ – – –	○ ○ ○ ○ –
707.41	2.0	**4330**	0.90	1.3	○ ○ ○ ○ ○ – – – – – –	○ ○ ○ ○ – – – – – – – –	W2	○ ○ ○ ○ ○ – – – –	○ ○ ○ – – –	○ ○ ○ ○ –
630.75	2.2	**4330**	1.01	1.3	○ ○ ○ ○ ○ – – – – – –	○ ○ ○ ○ ○ – – – – – – –	W2	○ ○ ○ ○ ○ – – – –	○ ○ ○ – – –	○ ○ ○ ○ –
587.86	2.4	**4330**	1.08	1.4	○ ○ ○ ○ ○ – – – – – –	○ ○ ○ ○ ○ – – – – – – –	W2	○ ○ ○ ○ ○ – – – –	○ ○ ○ – – –	○ ○ ○ ○ –
527.31	2.7	**4330**	1.20	1.7	○ ○ ○ ○ ○ – – – – – –	○ ○ ○ ○ ○ – – – – – – –	W2	○ ○ ○ ○ ○ – – – –	○ ○ ○ – – –	○ ○ ○ ○ –
478.39	2.9	**4330**	1.33	1.7	○ ○ ○ ○ ○ – – – – – –	○ ○ ○ ○ ○ ○ – – – – –	W2	○ ○ ○ ○ ○ – – – –	○ ○ ○ – – –	○ ○ ○ ○ –
414.39	3.4	**4330**	1.53	1.8	○ ○ ○ ○ ○ ○ – – – – –	○ ○ ○ ○ ○ ○ ○ – – – –	W2	○ ○ ○ ○ ○ ○ – – –	○ ○ ○ – – –	○ ○ ○ ○ –
374.95	3.7	**4330**	1.69	1.9	○ ○ ○ ○ ○ ○ – – – – –	○ ○ ○ ○ ○ ○ ○ – – – – –	W2	○ ○ ○ ○ ○ ○ – – –	○ ○ ○ – – –	○ ○ ○ ○ –
340.39	4.1	**4330**	1.86	1.9	○ ○ ○ ○ ○ ○ – – – – –	○ ○ ○ ○ ○ ○ ○ ○ – – – –	W3	○ ○ ○ ○ ○ ○ – – –	○ ○ ○ – – –	○ ○ ○ ○ –
303.50	4.6	**4330**	2.09	2.0	○ ○ ○ ○ ○ ○ – – – – –	○ ○ ○ ○ ○ ○ ○ ○ – – – –	W3	○ ○ ○ ○ ○ ○ – – –	○ ○ ○ – – –	○ ○ ○ ○ –
256.81	5.5	**4330**	2.47	4.4	– – – ○ ○ ○ – – – – –	– – – – ○ ○ ○ ○ ○ – – –	W3	– – ○ ○ ○ ○ – – –	– ○ ○ – – –	– ○ ○ ○ –
232.36	6.0	**4330**	2.73	4.5	– – – ○ ○ ○ – – – – –	– – – – ○ ○ ○ ○ ○ – – –	W3	– – ○ ○ ○ ○ – – –	– ○ ○ – – –	– ○ ○ ○ –
210.95	6.6	**4330**	3.01	4.7	– – – ○ ○ ○ ○ – – – –	– – – – ○ ○ ○ ○ ○ – – –	W3	– – ○ ○ ○ ○ ○ – –	– ○ ○ ○ – –	– ○ ○ ○ ○
188.09	7.4	**4330**	3.37	4.9	– – – ○ ○ ○ ○ – – – –	– – – – ○ ○ ○ ○ ○ – – –	W3	– – ○ ○ ○ ○ ○ – –	– ○ ○ ○ – –	– ○ ○ ○ ○
K73										
183.21	7.6	**4330**	3.46	3.8	– – – ○ ○ – – – – – –	– – – – – – ○ – – – – –	W3	– – – – ○ – – – –	– – ○ – – –	– – – ○ –
166.63	8.4	**4330**	3.81	4.4	– – – ○ ○ ○ – – – – –	– – – – – – ○ ○ ○ – – –	W3	– – – – ○ ○ – – –	– – ○ – – –	– – – ○ –
152.50	9.2	**4330**	4.16	5.0	– – – ○ ○ ○ – – – – –	– – – – – – ○ ○ ○ – – –	W3	– – – – ○ ○ – – –	– – ○ – – –	– – – ○ –
141.34	9.9	**4330**	4.49	5.6	– – – ○ ○ ○ – – – – –	– – – – – – ○ ○ ○ – – –	W3	– – – – ○ ○ – – –	– – ○ – – –	– – – ○ –
128.10	11	**4330**	4.95	6.5	– – – ○ ○ ○ ○ – – – –	– – – – – – ○ ○ ○ ○ – –	W4	– – – – ○ ○ ○ – –	– – ○ ○ – –	– – – ○ ○
116.83	12	**4330**	5.4	7.4	– – – ○ ○ ○ ○ – – – –	– – – – – – ○ ○ ○ ○ – –	W4	– – – – ○ ○ ○ – –	– – ○ ○ – –	– – – ○ ○
108.36	13	**4330**	5.9	8.3	– – – ○ ○ ○ ○ – – – –	– – – – – – ○ ○ ○ ○ ○ –	W4	– – – – ○ ○ ○ – –	– – ○ ○ – –	– – – ○ ○
98.17	14	**4330**	6.5	9.5	– – – ○ ○ ○ ○ ○ – – –	– – – – – – ○ ○ ○ ○ ○ –	W4	– – – – ○ ○ ○ ○ –	– – ○ ○ ○ –	– – – ○ ○
89.29	16	**4330**	7.1	10.7	– – – ○ ○ ○ ○ ○ – – –	– – – – – – ○ ○ ○ ○ ○ –	W4	– – – – ○ ○ ○ ○ –	– – ○ ○ ○ –	– – – ○ ○
80.57	17	**4330**	7.9	12.2	– – – ○ ○ ○ ○ ○ ○ – –	– – – – – – ○ ○ ○ ○ ○ ○	W4	– – – – ○ ○ ○ ○ ○	– – ○ ○ ○ ○	– – – ○ ○
73.10	19	**4330**	8.7	13.5	– – – – ○ ○ ○ ○ ○ – –	– – – – – – ○ ○ ○ ○ ○ ○	W4	– – – – ○ ○ ○ ○ ○	– – ○ ○ ○ ○	– – – ○ ○
63.32	22	**4330**	10.0	17.7	– – – – – – ○ ○ ○ – –	– – – – – – – – – ○ ○ ○	W5	– – – – – – ○ ○ ○	– – – ○ ○ ○	– – – – ○
57.29	24	**4330**	11.1	20.0	– – – – – – ○ ○ ○ – –	– – – – – – – – – ○ ○ ○	W5	– – – – – – ○ ○ ○	– – – ○ ○ ○	– – – – ○
52.01	27	**4330**	12.2	23.2	– – – – – – ○ ○ ○ – –	– – – – – – – – – ○ ○ ○	W5	– – – – – – ○ ○ ○	– – – ○ ○ ○	– – – – ○
46.38	30	**4330**	13.7	26.7	– – – – – – ○ ○ ○ – –	– – – – – – – – – ○ ○ ○	W5	– – – – – – ○ ○ ○	– – – ○ ○ ○	– – – – ○
43.99	32	**4330**	14.4	14.3	– – – ○ ○ ○ ○ ○ – – –	– – – – – – ○ ○ ○ ○ ○ ○	W5	– – – – ○ ○ ○ ○ –	– – ○ ○ ○ –	– – – ○ ○
40.01	35	**4330**	15.9	16.5	– – – ○ ○ ○ ○ ○ – – –	– – – – – – ○ ○ ○ ○ ○ ○	W5	– – – – ○ ○ ○ ○ –	– – ○ ○ ○ –	– – – ○ ○
36.10	39	**4330**	17.6	19.4	– – – ○ ○ ○ ○ ○ ○ – –	– – – – – – ○ ○ ○ ○ ○ ○	W5	– – – – ○ ○ ○ ○ ○	– – ○ ○ ○ ○	– – – ○ ○
32.75	43	**4330**	19.4	22.2	– – – – ○ ○ ○ ○ ○ – –	– – – – – – ○ ○ ○ ○ ○ ○	W5	– – – – ○ ○ ○ ○ ○	– – ○ ○ ○ ○	– – – ○ ○
28.37	49	**4330**	22.4	29.2	– – – – – – ○ ○ ○ ○ –	– – – – – – – – – ○ ○ ○	W5	– – – – – – ○ ○ ○	– – – ○ ○ ○	– – – – ○
25.67	55	**4330**	24.7	34.2	– – – – – – ○ ○ ○ ○ –	– – – – – – – – – ○ ○ ○	W5	– – – – – – ○ ○ ○	– – – ○ ○ ○	– – – – ○
23.31	60	**4330**	27.2	40.3	– – – – – – ○ ○ ○ ○ –	– – – – – – – – – ○ ○ ○	W5	– – – – – – ○ ○ ○	– – – ○ ○ ○	– – – – ○
20.78	67	**4330**	30.0	48.3	– – – – – – ○ ○ ○ ○ –	– – – – – – – – – ○ ○ ○	W5	– – – – – – ○ ○ ○	– – – ○ ○ ○	– – – – ○
17.62	79	**4330**	30.0	65	– – – – – – ○ ○ ○ ○ –	– – – – – – – – – ○ ○ ○	W5	– – – – – – ○ ○ ○	– – – ○ ○ ○	– – – – ○
15.04	93	**4160**	30.0	84	– – – – – – – ○ ○ ○ –	– – – – – – – – – – – ○	W5	– – – – – – – ○ ○	– – – – ○ ○	– – – – –
13.76	102	**3100**	30.0	32.0	– – – – – – ○ ○ ○ ○ –	– – – – – – – – – ○ ○ ○	W5	– – – – – – ○ ○ ○	– – – ○ ○ ○	– – – – ○
12.45	112	**3090**	30.0	37.5	– – – – – – ○ ○ ○ ○ –	– – – – – – – – – ○ ○ ○	W5	– – – – – – ○ ○ ○	– – – ○ ○ ○	– – – – ○
11.30	124	**3100**	30.0	44.4	– – – – – – ○ ○ ○ ○ –	– – – – – – – – – ○ ○ ○	W5	– – – – – – ○ ○ ○	– – – ○ ○ ○	– – – – ○
10.08	139	**3100**	30.0	53	– – – – – – ○ ○ ○ ○ –	– – – – – – – – – ○ ○ ○	W5	– – – – – – ○ ○ ○	– – – ○ ○ ○	– – – – ○
8.54	164	**3100**	30.0	72	– – – – – – ○ ○ ○ ○ –	– – – – – – – – – ○ ○ ○	W5	– – – – – – ○ ○ ○	– – – ○ ○ ○	– – – – ○
7.29	192	**3100**	30.0	94	– – – – – – – ○ ○ ○ –	– – – – – – – – – – – ○	W5	– – – – – – – ○ ○	– – – – ○ ○	– – – – –

Helical bevel gear units K

i	n2 (n1=1400) [1/min]	T2max [Nm]	P1max [kW]	Jg [kgcm²]	Three phase motor DM/DA 63	71	80	90	100	112	132	160	180	200	225	Servo motor TA 31	32	33	41	42	43	51	52	53	61	62	63	-W	Motor adapter -M IEC 63	71	80	90	100	112	132	160	180	-M NEMA 56	140	180	210	250	280	-M S 70	90	110	140	190
K83G33																																																	
16285	0.086	**7960**	0.07	0.13	○	○	–	–	–	–	–	–	–	–	–	○	–	–	–	–	–	–	–	–	–	–	–	W1	○	○	–	–	–	–	–	–	–	○	–	–	–	–	–	○	–	–	–	–
13981	0.10	**7960**	0.08	0.15	○	○	–	–	–	–	–	–	–	–	–	○	–	–	–	–	–	–	–	–	–	–	–	W1	○	○	–	–	–	–	–	–	–	○	–	–	–	–	–	○	–	–	–	–
12162	0.12	**7960**	0.10	0.20	○	○	–	–	–	–	–	–	–	–	–	○	–	–	–	–	–	–	–	–	–	–	–	W1	○	○	–	–	–	–	–	–	–	○	–	–	–	–	–	○	–	–	–	–
10689	0.13	**7960**	0.11	0.23	○	○	–	–	–	–	–	–	–	–	–	○	–	–	–	–	–	–	–	–	–	–	–	W1	○	○	–	–	–	–	–	–	–	○	–	–	–	–	–	○	–	–	–	–
9472.7	0.15	**7960**	0.12	0.27	○	○	–	–	–	–	–	–	–	–	–	○	–	–	–	–	–	–	–	–	–	–	–	W1	○	○	–	–	–	–	–	–	–	○	–	–	–	–	–	○	–	–	–	–
8450.8	0.17	**7960**	0.14	0.30	○	○	–	–	–	–	–	–	–	–	–	○	–	–	–	–	–	–	–	–	–	–	–	W1	○	○	–	–	–	–	–	–	–	○	–	–	–	–	–	○	–	–	–	–
7580.3	0.18	**7960**	0.15	0.34	○	○	–	–	–	–	–	–	–	–	–	○	–	–	–	–	–	–	–	–	–	–	–	W1	○	○	–	–	–	–	–	–	–	○	–	–	–	–	–	○	–	–	–	–
6889.3	0.20	**7960**	0.17	0.40	○	○	–	–	–	–	–	–	–	–	–	○	–	–	–	–	–	–	–	–	–	–	–	W1	○	○	–	–	–	–	–	–	–	○	–	–	–	–	–	○	–	–	–	–
6074.0	0.23	**7960**	0.19	0.46	○	○	○	–	–	–	–	–	–	–	–	○	–	–	–	–	–	–	–	–	–	–	–	W1	○	○	○	–	–	–	–	–	–	○	○	–	–	–	–	○	○	–	–	–
5379.6	0.26	**7960**	0.22	0.55	○	○	○	–	–	–	–	–	–	–	–	○	–	–	–	–	–	–	–	–	–	–	–	W1	○	○	○	–	–	–	–	–	–	○	○	–	–	–	–	○	○	–	–	–
4900.2	0.29	**7960**	0.24	0.56	○	○	○	–	–	–	–	–	–	–	–	○	–	–	–	–	–	–	–	–	–	–	–	W1	○	○	○	–	–	–	–	–	–	○	○	–	–	–	–	○	○	–	–	–
4292.3	0.33	**7960**	0.27	0.56	○	○	○	–	–	–	–	–	–	–	–	○	–	–	–	–	–	–	–	–	–	–	–	W1	○	○	○	–	–	–	–	–	–	○	○	–	–	–	–	○	○	–	–	–
3755.0	0.37	**7960**	0.31	0.41	○	○	○	–	–	–	–	–	–	–	–	○	○	–	–	–	–	–	–	–	–	–	–	W1	○	○	○	–	–	–	–	–	–	○	○	–	–	–	–	○	○	–	–	–
3368.2	0.42	**7960**	0.35	0.47	○	○	○	–	–	–	–	–	–	–	–	○	○	–	–	–	–	–	–	–	–	–	–	W1	○	○	○	–	–	–	–	–	–	○	○	–	–	–	–	○	○	–	–	–
3061.2	0.46	**7960**	0.38	0.56	○	○	○	○	–	–	–	–	–	–	–	○	○	–	–	–	–	–	–	–	–	–	–	W1	○	○	○	○	–	–	–	–	–	○	○	–	–	–	–	○	○	○	–	–
2698.9	0.52	**7960**	0.43	0.66	○	○	○	○	–	–	–	–	–	–	–	○	○	○	–	–	–	–	–	–	–	–	–	W1	○	○	○	○	–	–	–	–	–	○	○	–	–	–	–	○	○	○	–	–
K83G32																																																	
2357.9	0.59	**7960**	0.49	0.51	○	○	○	○	–	–	–	–	–	–	–	○	○	○	–	–	–	–	–	–	–	–	–	W1	○	○	○	○	–	–	–	–	–	○	○	–	–	–	–	○	○	○	–	–
2105.6	0.66	**7960**	0.55	0.59	○	○	○	○	–	–	–	–	–	–	–	○	○	○	–	–	–	–	–	–	–	–	–	W1	○	○	○	○	–	–	–	–	–	○	○	–	–	–	–	○	○	○	–	–
1893.6	0.74	**7960**	0.62	0.68	○	○	○	○	–	–	–	–	–	–	–	○	○	○	–	–	–	–	–	–	–	–	–	W2	○	○	○	○	–	–	–	–	–	○	○	–	–	–	–	○	○	○	–	–
1713.0	0.82	**7960**	0.68	0.87	○	○	○	○	–	–	–	–	–	–	–	○	○	○	–	–	–	–	–	–	–	–	–	W2	○	○	○	○	–	–	–	–	–	○	○	–	–	–	–	○	○	○	–	–
1561.4	0.90	**7960**	0.75	0.96	○	○	○	○	–	–	–	–	–	–	–	○	○	○	–	–	–	–	–	–	–	–	–	W2	○	○	○	○	–	–	–	–	–	○	○	–	–	–	–	○	○	○	–	–
1393.0	1.0	**7960**	0.84	1.1	○	○	○	○	○	–	–	–	–	–	–	○	○	○	○	–	–	–	–	–	–	–	–	W2	○	○	○	○	○	–	–	–	–	○	○	○	–	–	–	○	○	○	○	–
1249.5	1.1	**7960**	0.93	1.3	○	○	○	○	○	–	–	–	–	–	–	○	○	○	○	–	–	–	–	–	–	–	–	W2	○	○	○	○	○	–	–	–	–	○	○	○	–	–	–	○	○	○	○	–
1138.2	1.2	**7960**	1.02	1.3	○	○	○	○	○	–	–	–	–	–	–	○	○	○	○	○	–	–	–	–	–	–	–	W2	○	○	○	○	○	–	–	–	–	○	○	○	–	–	–	○	○	○	○	–
996.96	1.4	**7960**	1.17	1.3	○	○	○	○	○	–	–	–	–	–	–	○	○	○	○	○	–	–	–	–	–	–	–	W2	○	○	○	○	○	–	–	–	–	○	○	○	–	–	–	○	○	○	○	–
906.86	1.5	**7960**	1.29	1.3	○	○	○	○	○	–	–	–	–	–	–	○	○	○	○	○	○	○	–	–	–	–	–	W2	○	○	○	○	○	–	–	–	–	○	○	○	–	–	–	○	○	○	○	–
816.82	1.7	**7960**	1.43	1.4	○	○	○	○	○	–	–	–	–	–	–	○	○	○	○	○	○	○	–	–	–	–	–	W2	○	○	○	○	○	–	–	–	–	○	○	○	–	–	–	○	○	○	○	–
774.35	1.8	**7960**	1.51	3.0	–	–	–	○	○	○	–	–	–	–	–	–	–	–	○	○	○	–	–	–	–	–	–	W2	–	–	○	○	○	○	–	–	–	–	○	○	–	–	–	–	○	○	○	–
705.34	2.0	**7960**	1.65	3.0	–	–	–	○	○	○	–	–	–	–	–	–	–	–	○	○	○	–	–	–	–	–	–	W2	–	–	○	○	○	○	–	–	–	–	○	○	–	–	–	–	○	○	○	–
617.84	2.3	**7960**	1.89	3.1	–	–	–	○	○	○	–	–	–	–	–	–	–	–	○	○	○	○	–	–	–	–	–	W3	–	–	○	○	○	○	–	–	–	–	○	○	–	–	–	–	○	○	○	–
545.46	2.6	**7960**	2.14	2.3	–	–	–	○	○	○	–	–	–	–	–	–	–	–	○	○	○	○	–	–	–	–	–	W3	–	–	○	○	○	○	–	–	–	–	○	○	–	–	–	–	○	○	○	–
483.36	2.9	**7960**	2.41	2.8	–	–	–	○	○	○	–	–	–	–	–	–	–	–	○	○	○	○	○	○	–	–	–	W3	–	–	○	○	○	○	–	–	–	–	○	○	–	–	–	–	○	○	○	–
425.46	3.3	**7960**	2.74	3.5	–	–	–	○	○	○	–	–	–	–	–	–	–	–	○	○	○	○	○	○	–	–	–	W3	–	–	○	○	○	○	–	–	–	–	○	○	–	–	–	–	○	○	○	–
372.59	3.8	**7960**	3.13	4.6	–	–	–	○	○	○	○	–	–	–	–	–	–	–	○	○	○	○	○	○	–	–	–	W3	–	–	○	○	○	○	○	–	–	–	○	○	○	–	–	–	○	○	○	○
327.28	4.3	**7960**	3.56	5.4	–	–	–	–	○	○	○	–	–	–	–	–	–	–	–	–	–	○	○	○	–	–	–	W3	–	–	–	–	○	○	○	–	–	–	–	○	○	–	–	–	–	○	○	○
298.11	4.7	**7960**	3.91	5.7	–	–	–	–	○	○	○	–	–	–	–	–	–	–	–	–	–	○	○	○	○	–	–	W3	–	–	–	–	○	○	○	–	–	–	–	○	○	–	–	–	–	○	○	○
261.13	5.4	**7960**	4.47	6.1	–	–	–	–	○	○	○	–	–	–	–	–	–	–	–	–	–	○	○	○	○	–	–	W4	–	–	–	–	○	○	○	–	–	–	–	○	○	–	–	–	–	○	○	○
237.53	5.9	**7960**	4.91	6.4	–	–	–	–	○	○	○	–	–	–	–	–	–	–	–	–	–	○	○	○	○	–	–	W4	–	–	–	–	○	○	○	–	–	–	–	○	○	–	–	–	–	○	○	○
213.95	6.5	**7960**	5.5	6.7	–	–	–	–	○	○	○	–	–	–	–	–	–	–	–	–	–	○	○	○	○	–	–	W4	–	–	–	–	○	○	○	–	–	–	–	○	○	–	–	–	–	○	○	○
192.10	7.3	**7960**	6.1	7.1	–	–	–	–	○	○	○	–	–	–	–	–	–	–	–	–	–	○	○	○	○	○	–	W4	–	–	–	–	○	○	○	–	–	–	–	○	○	–	–	–	–	○	○	○
187.60	7.5	**7680**	6.0	6.4	–	–	–	○	○	○	○	–	–	–	–	–	–	–	○	○	○	○	○	○	○	○	–	W4	–	–	○	○	○	○	○	–	–	–	○	○	○	–	–	–	○	○	○	○
164.78	8.5	**7060**	6.3	7.8	–	–	–	–	○	○	○	–	–	–	–	–	–	–	–	–	–	○	○	○	○	○	–	W4	–	–	–	–	○	○	○	–	–	–	–	○	○	–	–	–	–	○	○	○

Helical bevel gear units K

i	n2 (n1=1400) [1/min]	T2max [Nm]	P1max [kW]	Jg [kgcm²]	Three phase motor DM/DA 63 71 80 90 100 112 132 160 180 200 225	Servo motor TA 31 32 33 41 42 43 51 52 53 61 62 63	-W	Motor adapter -M IEC 63 71 80 90 100 112 132 160 180	-M NEMA 56 140 180 210 250 280	-M S 70 90 110 140 190
K83										
144.68	9.7	**7960**	8.1	10.9	- - - - o o o - - - -	- - - - - - - - - - o o -	W4	- - - - o o o - -	- - o o - -	- - - o o
132.28	11	**7960**	8.8	12.4	- - - - o o o - - - -	- - - - - - - - - - o o -	W4	- - - - o o o - -	- - o o - -	- - - o o
122.27	11	**7960**	9.5	13.8	- - - - o o o - - - -	- - - - - - - - - - o o -	W4	- - - - o o o - -	- - o o - -	- - - o o
111.12	13	**7960**	10.5	15.9	- - - - o o o o - - -	- - - - - - - - - - o o o	W5	- - - - o o o o -	- - o o o -	- - - o o
101.42	14	**7960**	11.5	18.0	- - - - o o o o - - -	- - - - - - - - - - o o o	W5	- - - - o o o o -	- - o o o -	- - - o o
91.87	15	**7960**	12.7	20.5	- - - - o o o o o - -	- - - - - - - - - - o o o	W5	- - - - o o o o o	- - o o o o	- - - o o
83.68	17	**7960**	13.9	24.9	- - - - o o o o o - -	- - - - - - - - - - o o o	W5	- - - - o o o o o	- - o o o o	- - - o o
73.30	19	**7960**	15.9	29.1	- - - - - - o o o - -	- - - - - - - - - - o o o	W5	- - - - - - o o o	- - - o o o	- - - - o
66.68	21	**7960**	17.5	33.1	- - - - - - o o o - -	- - - - - - - - - - o o o	W5	- - - - - - o o o	- - - o o o	- - - - o
60.06	23	**7960**	19.4	37.4	- - - - - - o o o - -	- - - - - - - - - - o o o	W5	- - - - - - o o o	- - - o o o	- - - - o
53.92	26	**7960**	21.6	42.7	- - - - - - o o o o -	- - - - - - - - - - o o o	W5	- - - - - - o o o	- - - o o o	- - - - o
46.25	30	**7960**	25.2	52	- - - - - - o o o o -	- - - - - - - - - - o o o	W5	- - - - - - o o o	- - - o o o	- - - - o
39.98	35	**7960**	29.2	62	- - - - - - - o o o -	- - - - - - - - - - - - o	W5	- - - - - - - o o	- - - - o o	- - - - -
34.75	40	**7960**	33.6	78	- - - - - - - - o o o	- - - - - - - - - - - - -	W5	- - - - - - - o o	- - - - o o	- - - - -
32.84	43	**7960**	35.5	40.0	- - - - - - o o o o o	- - - - - - - - - - o o o	W5	- - - - - - o o o	- - - o o o	- - - - o
29.88	47	**7960**	39.0	46.2	- - - - - - o o o o o	- - - - - - - - - - o o o	W5	- - - - - - o o o	- - - o o o	- - - - o
26.91	52	**7960**	43.3	54	- - - - - - o o o o o	- - - - - - - - - - o o o	W5	- - - - - - o o o	- - - o o o	- - - - o
24.16	58	**7960**	45.0	63	- - - - - - o o o o o	- - - - - - - - - - o o o	W5	- - - - - - o o o	- - - o o o	- - - - o
20.73	68	**7740**	45.0	79	- - - - - - o o o o o	- - - - - - - - - - o o o	W5	- - - - - - o o o	- - - o o o	- - - - o
17.91	78	**7400**	45.0	98	- - - - - - - o o o o	- - - - - - - - - - - - o	W5	- - - - - - - o o	- - - - o o	- - - - -
15.57	90	**7100**	45.0	126	- - - - - - - - o o o	- - - - - - - - - - - - -	W5	- - - - - - - o o	- - - - o o	- - - - -
14.01	100	**4850**	45.0	59	- - - - - - o o o o o	- - - - - - - - - - o o o	W5	- - - - - - o o o	- - - o o o	- - - - o
12.58	111	**4850**	45.0	70	- - - - - - o o o o o	- - - - - - - - - - o o o	W5	- - - - - - o o o	- - - o o o	- - - - o
10.79	130	**4850**	45.0	89	- - - - - - o o o o o	- - - - - - - - - - o o o	W5	- - - - - - o o o	- - - o o o	- - - - o
9.32	150	**4850**	45.0	111	- - - - - - - o o o o	- - - - - - - - - - - - o	W5	- - - - - - - o o	- - - - o o	- - - - -
8.11	173	**4850**	45.0	144	- - - - - - - - o o o	- - - - - - - - - - - - -	W5	- - - - - - - o o	- - - - o o	- - - - -
K93G43										
19466	0.072	**12300**	0.09	0.22	- o - - - - - - - - -	- - - - - - - - - - - - -	W1	o o - - - - - - -	o - - - - -	o - - - -
16822	0.083	**12300**	0.11	0.31	- o - - - - - - - - -	- - - - - - - - - - - - -	W1	o o - - - - - - -	o - - - - -	o - - - -
14735	0.095	**12300**	0.12	0.38	- o - - - - - - - - -	- - - - - - - - - - - - -	W1	o o - - - - - - -	o - - - - -	o - - - -
13045	0.11	**12300**	0.14	0.44	- o - - - - - - - - -	- - - - - - - - - - - - -	W1	o o - - - - - - -	o - - - - -	o - - - -
11648	0.12	**12300**	0.15	0.50	- o - - - - - - - - -	- - - - - - - - - - - - -	W1	o o - - - - - - -	o - - - - -	o - - - -
10476	0.13	**12300**	0.17	0.57	- o - - - - - - - - -	- - - - - - - - - - - - -	W1	o o - - - - - - -	o - - - - -	o - - - -
9476.8	0.15	**12300**	0.19	0.74	- o o - - - - - - - -	- - - - - - - - - - - - -	W1	o o o - - - - - -	o o - - - -	o o - - -
8638.2	0.16	**12300**	0.21	0.80	- o o - - - - - - - -	- - - - - - - - - - - - -	W1	o o o - - - - - -	o o - - - -	o o - - -
7706.3	0.18	**12300**	0.23	0.91	- o o - - - - - - - -	- - - - - - - - - - - - -	W1	o o o - - - - - -	o o - - - -	o o - - -
6912.5	0.20	**12300**	0.26	1.0	- o o - - - - - - - -	- - - - - - - - - - - - -	W1	o o o - - - - - -	o o - - - -	o o - - -
6318.8	0.22	**12300**	0.28	1.0	- o o - - - - - - - -	- - - - - - - - - - - - -	W1	o o o - - - - - -	o o - - - -	o o - - -
5768.8	0.24	**12300**	0.31	1.0	- o o - - - - - - - -	- - - - - - - - - - - - -	W1	o o o - - - - - -	o o - - - -	o o - - -
5277.6	0.27	**12300**	0.34	0.69	- o o - - - - - - - -	- - - - - - - - - - - - -	W1	o o o - - - - - -	o o - - - -	o o - - -
4774.3	0.29	**12300**	0.38	0.89	- o o o - - - - - - -	- - - - - - - - - - - - -	W1	o o o o - - - - -	o o - - - -	o o o - -
4351.8	0.32	**12300**	0.41	0.98	- o o o - - - - - - -	- - - - - - - - - - - - -	W1	o o o o - - - - -	o o - - - -	o o o - -
3882.4	0.36	**12300**	0.46	1.1	- o o o - - - - - - -	- - - - - - - - - - - - -	W1	o o o o - - - - -	o o - - - -	o o o - -
3482.4	0.40	**12300**	0.52	1.3	- o o o - - - - - - -	- - - - - - - - - - - - -	W1	o o o o - - - - -	o o - - - -	o o o - -
3183.3	0.44	**12300**	0.56	1.3	- o o o - - - - - - -	- - - - - - - - - - - - -	W1	o o o o - - - - -	o o - - - -	o o o - -
2906.2	0.48	**12300**	0.62	1.3	- o o o - - - - - - -	- - - - - - - - - - - - -	W2	o o o o - - - - -	o o - - - -	o o o - -
2627.7	0.53	**12300**	0.68	1.3	- o o o - - - - - - -	- - - - - - - - - - - - -	W2	o o o o - - - - -	o o - - - -	o o o - -

Helical bevel gear units K

i	n2 (n1=1400) [1/min]	T2max [Nm]	P1max [kW]	Jg [kgcm²]	Three phase motor DM/DA 63	71	80	90	100	112	132	160	180	200	225	Servo motor TA 31	32	33	41	42	43	51	52	53	61	62	63	-W	Motor adapter -M IEC 63	71	80	90	100	112	132	160	180	-M NEMA 56	140	180	210	250	280	-M S 70	90	110	140	190
K93G42																																															
2486.8	0.56	**12300**	0.72	1.1	–	○	○	○	–	–	–	–	–	–	–	–	–	–	–	–	–	–	–	–	–	–	–	W2	○	○	○	○	–	–	–	–	○	○	–	–	–	–	○	○	○	–	–
2245.4	0.62	**12300**	0.80	1.3	–	○	○	○	○	–	–	–	–	–	–	–	–	–	○	–	–	–	–	–	–	–	–	W2	○	○	○	○	○	–	–	–	○	○	○	–	–	–	○	○	○	○	–
2039.9	0.69	**12300**	0.88	1.4	–	○	○	○	○	–	–	–	–	–	–	–	–	–	○	–	–	–	–	–	–	–	–	W2	○	○	○	○	○	–	–	–	○	○	○	–	–	–	○	○	○	○	–
1865.1	0.75	**12300**	0.96	1.6	–	○	○	○	○	–	–	–	–	–	–	–	–	–	○	–	–	–	–	–	–	–	–	W2	○	○	○	○	○	–	–	–	○	○	○	–	–	–	○	○	○	○	–
1673.5	0.84	**12300**	1.07	1.8	–	○	○	○	○	–	–	–	–	–	–	–	–	–	○	○	–	–	–	–	–	–	–	W2	○	○	○	○	○	–	–	–	○	○	○	–	–	–	○	○	○	○	–
1510.3	0.93	**12300**	1.19	2.1	–	○	○	○	○	–	–	–	–	–	–	–	–	–	○	○	–	–	–	–	–	–	–	W2	○	○	○	○	○	–	–	–	○	○	○	–	–	–	○	○	○	○	–
1380.6	1.0	**12300**	1.30	2.1	–	○	○	○	○	–	–	–	–	–	–	–	–	–	○	○	○	○	–	–	–	–	–	W2	○	○	○	○	○	–	–	–	○	○	○	–	–	–	○	○	○	○	–
1260.4	1.1	**12300**	1.42	2.2	–	○	○	○	○	–	–	–	–	–	–	–	–	–	○	○	○	○	–	–	–	–	–	W2	○	○	○	○	○	–	–	–	○	○	○	–	–	–	○	○	○	○	–
1139.6	1.2	**12300**	1.58	2.2	–	○	○	○	○	○	–	–	–	–	–	–	–	–	○	○	○	○	–	–	–	–	–	W2	○	○	○	○	○	○	–	–	○	○	○	–	–	–	○	○	○	○	–
988.56	1.4	**12300**	1.82	2.3	–	○	○	○	○	○	–	–	–	–	–	–	–	–	○	○	○	○	○	–	–	–	–	W3	○	○	○	○	○	○	–	–	○	○	○	–	–	–	○	○	○	○	–
864.99	1.6	**12300**	2.08	2.3	–	○	○	○	○	○	–	–	–	–	–	–	–	–	○	○	○	○	○	–	–	–	–	W3	○	○	○	○	○	○	–	–	○	○	○	–	–	–	○	○	○	○	–
762.02	1.8	**12300**	2.36	2.4	–	○	○	○	○	○	–	–	–	–	–	–	–	–	○	○	○	○	○	○	–	–	–	W3	○	○	○	○	○	○	–	–	○	○	○	–	–	–	○	○	○	○	–
651.55	2.1	**12300**	2.76	2.5	–	○	○	○	○	○	–	–	–	–	–	–	–	–	○	○	○	○	○	○	–	–	–	W3	○	○	○	○	○	○	–	–	○	○	○	–	–	–	○	○	○	○	–
631.60	2.2	**12300**	2.84	4.7	–	–	–	○	○	○	–	–	–	–	–	–	–	–	○	○	○	○	○	○	–	–	–	W3	–	–	○	○	○	○	–	–	–	○	○	–	–	–	–	○	○	○	–
560.85	2.5	**12300**	3.20	5.5	–	–	–	○	○	○	○	–	–	–	–	–	–	–	○	○	○	○	○	–	–	–	–	W3	–	–	○	○	○	○	○	–	–	○	○	○	–	–	–	○	○	○	○	○
497.00	2.8	**12300**	3.61	7.2	–	–	–	○	○	○	○	–	–	–	–	–	–	–	○	○	○	○	○	–	–	–	–	W3	–	–	○	○	○	○	○	○	–	–	○	○	○	–	–	–	○	○	○	○	○
454.31	3.1	**12300**	3.95	7.4	–	–	–	○	○	○	○	–	–	–	–	–	–	–	○	○	○	○	○	○	○	–	–	W3	–	–	○	○	○	○	○	○	–	–	○	○	○	–	–	–	○	○	○	○	○
414.77	3.4	**12300**	4.33	7.8	–	–	–	○	○	○	○	○	–	–	–	–	–	–	○	○	○	○	○	○	○	–	–	W3	–	–	○	○	○	○	○	○	–	–	○	○	○	–	–	–	○	○	○	○	○
375.01	3.7	**12300**	4.79	8.2	–	–	–	○	○	○	○	○	–	–	–	–	–	–	○	○	○	○	○	○	○	–	–	W4	–	–	○	○	○	○	○	○	–	–	○	○	○	–	–	–	○	○	○	○	○
325.31	4.3	**12300**	5.5	8.7	–	–	–	○	○	○	○	○	–	–	–	–	–	–	○	○	○	○	○	○	○	○	–	W4	–	–	○	○	○	○	○	○	–	–	○	○	○	–	–	–	○	○	○	○	○
284.64	4.9	**12300**	6.3	9.3	–	–	–	○	○	○	○	○	–	–	–	–	–	–	○	○	○	○	○	○	○	○	–	W4	–	–	○	○	○	○	○	○	–	–	○	○	○	–	–	–	○	○	○	○	○
252.16	5.6	**12300**	7.1	17.1	–	–	–	–	–	–	○	○	–	–	–	–	–	–	–	–	–	–	–	–	○	○	○	W4	–	–	–	–	–	–	○	○	–	–	–	–	○	–	–	–	–	–	–	–	○
218.74	6.4	**12300**	8.2	18.3	–	–	–	–	–	–	○	○	–	–	–	–	–	–	–	–	–	–	–	–	○	○	○	W4	–	–	–	–	–	–	○	○	–	–	–	–	○	–	–	–	–	–	–	–	○
191.40	7.3	**12300**	9.4	19.6	–	–	–	–	–	–	○	○	–	–	–	–	–	–	–	–	–	–	–	–	○	○	○	W4	–	–	–	–	–	–	○	○	–	–	–	–	○	–	–	–	–	–	–	–	○
168.61	8.3	**12300**	10.7	21.0	–	–	–	–	–	–	○	○	–	–	–	–	–	–	–	–	–	–	–	–	○	○	○	W4	–	–	–	–	–	–	○	○	–	–	–	–	○	–	–	–	–	–	–	–	○
144.17	9.7	**12300**	12.5	23.1	–	–	–	–	–	–	○	○	–	–	–	–	–	–	–	–	–	–	–	–	○	○	○	W4	–	–	–	–	–	–	○	○	–	–	–	–	○	–	–	–	–	–	–	–	○
K93																																															
137.36	10	**12300**	13.1	28.6	–	–	–	–	–	–	○	○	–	–	–	–	–	–	–	–	–	–	–	–	–	–	–	W5	–	–	–	–	–	–	○	○	–	–	–	–	○	○	–	–	–	○	○	–	–
126.06	11	**12300**	14.2	32.6	–	–	–	–	–	–	○	○	–	–	–	–	–	–	–	–	–	–	–	–	–	–	–	W5	–	–	–	–	–	–	○	○	–	–	–	–	○	○	–	–	–	○	○	–	–
114.62	12	**12300**	15.7	37.2	–	–	–	–	–	–	○	○	○	–	–	–	–	–	–	–	–	–	–	–	–	–	–	W5	–	–	–	–	–	–	○	○	○	–	–	–	○	○	○	–	–	–	○	○	○	–
104.80	13	**12300**	17.1	42.2	–	–	–	–	–	–	○	○	○	–	–	–	–	–	–	–	–	–	–	–	–	–	–	W5	–	–	–	–	–	–	○	○	○	–	–	–	○	○	○	–	–	–	○	○	○	–
92.68	15	**12300**	19.4	49.2	–	–	–	–	–	–	○	○	○	–	–	–	–	–	–	–	–	–	–	–	–	–	–	W5	–	–	–	–	–	–	○	○	○	–	–	–	○	○	○	–	–	–	○	○	○	–
84.72	17	**12300**	21.2	55	–	–	–	–	–	–	○	○	○	○	–	–	–	–	–	–	–	–	–	–	–	–	–	W5	–	–	–	–	–	–	○	○	○	–	–	–	○	○	○	–	–	–	○	○	○	–
77.34	18	**12300**	23.2	69	–	–	–	–	–	–	○	○	○	○	–	–	–	–	–	–	–	–	–	–	–	–	–	W5	–	–	–	–	–	–	○	○	○	–	–	–	○	○	○	–	–	–	○	○	○	–
69.93	20	**12300**	25.7	78	–	–	–	–	–	–	○	○	○	○	–	–	–	–	–	–	–	–	–	–	–	–	–	W5	–	–	–	–	–	–	○	○	○	–	–	–	○	○	○	–	–	–	○	○	○	–
60.66	23	**12300**	29.6	94	–	–	–	–	–	–	○	○	○	○	–	–	–	–	–	–	–	–	–	–	–	–	–	W5	–	–	–	–	–	–	○	○	○	–	–	–	○	○	○	–	–	–	○	○	○	–
53.08	26	**12300**	33.8	111	–	–	–	–	–	–	–	○	○	○	○	–	–	–	–	–	–	–	–	–	–	–	–	W5	–	–	–	–	–	–	–	○	○	–	–	–	–	○	○	–	–	–	–	○	○	–	–
46.76	30	**12100**	37.9	129	–	–	–	–	–	–	–	–	○	○	○	–	–	–	–	–	–	–	–	–	–	–	–	W5	–	–	–	–	–	–	–	○	○	–	–	–	–	○	○	–	–	–	–	○	○	–	–
39.98	35	**11700**	42.9	156	–	–	–	–	–	–	–	–	○	○	–	–	–	–	–	–	–	–	–	–	–	–	–		–	–	–	–	–	–	–	–	–	–	–	–	–	–	–	–	–	–	–	–	–	–
34.75	40	**11300**	47.7	185	–	–	–	–	–	–	–	–	○	○	–	–	–	–	–	–	–	–	–	–	–	–	–		–	–	–	–	–	–	–	–	–	–	–	–	–	–	–	–	–	–	–	–	–	–
31.33	45	**12300**	57.3	101	–	–	–	–	–	–	○	○	○	○	○	–	–	–	–	–	–	–	–	–	–	–	–	W5	–	–	–	–	–	–	○	○	○	–	–	–	○	○	○	–	–	–	○	○	○	–
27.18	52	**12300**	66.1	124	–	–	–	–	–	–	○	○	○	○	○	–	–	–	–	–	–	–	–	–	–	–	–	W5	–	–	–	–	–	–	○	○	○	–	–	–	○	○	○	–	–	–	○	○	○	–
23.78	59	**11800**	72.7	150	–	–	–	–	–	–	○	○	○	○	–	–	–	–	–	–	–	–	–	–	–	–	–	W5	–	–	–	–	–	–	–	○	○	–	–	–	–	○	○	–	–	–	–	○	○	–	–
20.95	67	**11400**	79.8	180	–	–	–	–	–	–	–	○	○	○	–	–	–	–	–	–	–	–	–	–	–	–	–	W5	–	–	–	–	–	–	–	○	○	–	–	–	–	○	○	–	–	–	–	○	○	–	–
17.91	78	**10800**	88.4	226	–	–	–	–	–	–	–	–	○	○	–	–	–	–	–	–	–	–	–	–	–	–	–		–	–	–	–	–	–	–	–	–	–	–	–	–	–	–	–	–	–	–	–	–	–
15.57	90	**10400**	90.0	277	–	–	–	–	–	–	–	–	○	○	–	–	–	–	–	–	–	–	–	–	–	–	–		–	–	–	–	–	–	–	–	–	–	–	–	–	–	–	–	–	–	–	–	–	–
14.34	98	**7320**	74.8	134	–	–	–	–	–	–	○	○	○	○	○	–	–	–	–	–	–	–	–	–	–	–	–	W5	–	–	–	–	–	–	○	○	○	–	–	–	○	○	○	–	–	–	○	○	○	–
12.55	112	**7320**	85.5	163	–	–	–	–	–	–	○	○	○	○	–	–	–	–	–	–	–	–	–	–	–	–	–	W5	–	–	–	–	–	–	–	○	○	–	–	–	–	○	○	–	–	–	–	○	○	–	–
11.06	127	**7320**	90.0	196	–	–	–	–	–	–	–	○	○	○	–	–	–	–	–	–	–	–	–	–	–	–	–	W5	–	–	–	–	–	–	–	○	○	–	–	–	–	○	○	–	–	–	–	○	○	–	–
9.45	148	**7320**	90.0	249	–	–	–	–	–	–	–	–	○	○	–	–	–	–	–	–	–	–	–	–	–	–	–		–	–	–	–	–	–	–	–	–	–	–	–	–	–	–	–	–	–	–	–	–	–
8.22	170	**7230**	90.0	308	–	–	–	–	–	–	–	–	○	○	–	–	–	–	–	–	–	–	–	–	–	–	–		–	–	–	–	–	–	–	–	–	–	–	–	–	–	–	–	–	–	–	–	–	–

Helical bevel geared motors K

0.12 kW

n2 [1/min]	T2 [Nm]	cG	i	Type	Dimensions Page	~kg
1.5	735	1.95	920.69	**K53G22A DM63K4**	171/15	52
1.7	645	2.2	811.74	**K53G22B DM63K4**		52
1.9	575	2.5	718.94	**K53G22C DM63K4**		56
2.1	515	2.8	648.83			
1.5	730	1.00	912.99	**K43G12A DM63K4**	170/15	33
1.7	635	1.15	796.88	**K43G12B DM63K4**		33
2.0	555	1.35	697.97	**K43G12C DM63K4**		35
2.2	510	1.45	641.52			
2.4	450	1.65	565.19			
2.8	400	1.85	501.06			
3.1	355	2.1	446.44			
3.4	320	2.3	400.77			
3.9	280	2.7	349.80			
2.3	490	0.80	612.54	**K33G12A DM63K4**	169/15	25
2.6	430	0.95	536.51	**K33G12B DM63K4**		25
2.8	395	1.00	493.12	**K33G12C DM63K4**		27
3.2	345	1.15	434.44			
3.6	305	1.30	385.15			
4.0	275	1.45	343.16			
4.5	245	1.60	308.06			
5.1	215	1.85	268.88			
5.9	188	2.1	235.51			
6.6	167	2.4	210.10			
7.3	150	2.7	188.46			
8.1	137	2.9	171.28			
4.6	240	0.85	298.43	**K23G02A DM63K4**	168/15	22
5.3	210	1.00	261.38	**K23G02B DM63K4**		22
6.0	182	1.10	228.47	**K23G02C DM63K4**		23
6.9	160	1.25	201.29			
7.7	142	1.45	178.45			
8.7	127	1.60	159.00			
9.7	114	1.80	142.73			
11	99	2.1	124.58			
13	87	2.3	109.11			
13	85	2.4	102.27	**K23A DM63K4**	168	18
16	73	2.8	87.38	**K23B DM63K4**		18
18	63	3.2	75.61	**K23C DM63K4**		19
21	55	3.7	66.09			
24	48	4.2	58.23			
27	43	4.8	51.62			
30	38	5.3	46.00			
33	34	5.9	41.29			
38	30	6.8	36.04			
44	26	7.8	31.57			
53	22	9.4	26.14			
60	19	11	22.85			
69	17	12	20.13			
77	15	14	17.84			
87	13	15	15.90			
97	12	17	14.27			
111	10	20	12.46			
126	9.1	23	10.91			
148	7.8	21	9.34			
167	6.9	23	8.28			
187	6.1	26	7.38			
208	5.5	29	6.63			
239	4.8	34	5.78			
272	4.2	38	5.07			

0.18 kW

n2 [1/min]	T2 [Nm]	cG	i	Type	Dimensions Page	~kg
1.4	1170	2.2	981.68	**K63G22A DM63G4**	172/15	77
1.6	1040	2.5	869.44	**K63G22B DM63G4**		77
1.7	960	2.7	803.80	**K63G22C DM63G4**		82
1.9	865	2.9	724.09			
1.5	1100	1.30	920.69	**K53G22A DM63G4**	171/15	53
1.7	970	1.45	811.74	**K53G22B DM63G4**		53
1.9	860	1.65	718.94	**K53G22C DM63G4**		56
2.1	775	1.85	648.83			
2.3	715	2.00	597.22			
2.6	625	2.3	524.36			
2.9	560	2.5	470.34			
3.2	510	2.8	427.46			
1.7	955	0.80	796.88	**K43G12A DM63G4**	170/15	33
2.0	835	0.90	697.97	**K43G12B DM63G4**		33
2.2	765	0.95	641.52	**K43G12C DM63G4**		35
2.4	675	1.10	565.19			
2.8	600	1.25	501.06			
3.1	535	1.40	446.44			
3.4	480	1.55	400.77			
3.9	420	1.80	349.80			
4.5	365	2.0	306.38			
5.0	330	2.3	275.54			
5.5	300	2.5	249.26			
6.1	270	2.7	227.20			
3.6	460	0.85	385.15	**K33G12A DM63G4**	169/15	25
4.0	410	0.95	343.16	**K33G12B DM63G4**		25
4.5	370	1.10	308.06	**K33G12C DM63G4**		27
5.1	320	1.25	268.88			
5.9	280	1.40	235.51			
6.6	250	1.60	210.10			
7.3	225	1.75	188.46			
8.1	205	1.95	171.28			
9.1	181	2.2	151.01			
10	160	2.5	133.74			
12	143	2.8	119.69			
11	150	2.7	120.13	**K33A DM63G4**	169	20
				K33B DM63G4		20
				K33C DM63G4		23
6.9	240	0.85	201.29	**K23G02A DM63G4**	168/15	23
7.7	215	0.95	178.45	**K23G02B DM63G4**		23
8.7	190	1.05	159.00	**K23G02C DM63G4**		24
9.7	171	1.20	142.73			
11	149	1.35	124.58			
13	130	1.55	109.11			

Helical bevel geared motors K

0.18 kW

n2 [1/min]	T2 [Nm]	cG	i	Type	Dimensions Page	~kg
13	127	1.60	102.27	**K23A DM63G4**	168	18
16	109	1.85	87.38	**K23B DM63G4**		18
18	94	2.2	75.61	**K23C DM63G4**		19
21	82	2.5	66.09			
24	73	2.8	58.23			
27	64	3.2	51.62			
30	57	3.6	46.00			
33	51	4.0	41.29			
38	45	4.5	36.04			
44	39	5.2	31.57			
53	33	6.3	26.14			
60	28	7.2	22.85			
69	25	8.1	20.13			
77	22	9.2	17.84			
87	20	10	15.90			
97	18	11	14.27			
111	16	13	12.46			
126	14	15	10.91			
148	12	14	9.34			
167	10	16	8.28			
187	9.2	18	7.38			
208	8.3	20	6.63			
239	7.2	22	5.78			
272	6.3	26	5.07			

0.25 kW

n2 [1/min]	T2 [Nm]	cG	i	Type	Dimensions Page	~kg
1.4	1620	2.7	994.22	**K73G32A DM71K4**	173/15	130
1.6	1400	3.1	861.22	**K73G32B DM71K4**		130
				K73G32C DM71K4		139
1.4	1600	1.60	981.68	**K63G22A DM71K4**	172/15	78
1.6	1410	1.80	869.44	**K63G22B DM71K4**		78
1.8	1310	1.95	803.80	**K63G22C DM71K4**		84
1.9	1180	2.2	724.09			
2.2	1030	2.5	634.13			
2.5	925	2.8	568.80			
2.7	840	3.0	516.95			
1.5	1500	0.95	920.69	**K53G22A DM71K4**	171/15	54
1.7	1320	1.10	811.74	**K53G22B DM71K4**		54
2.0	1170	1.20	718.94	**K53G22C DM71K4**		58
2.2	1050	1.35	648.83			
2.4	970	1.45	597.22			
2.7	850	1.70	524.36			
3.0	765	1.85	470.34			
3.3	695	2.1	427.46			
3.7	615	2.3	376.88			
4.2	545	2.6	333.79			
4.7	490	2.9	301.24			

0.25 kW

n2 [1/min]	T2 [Nm]	cG	i	Type	Dimensions Page	~kg
2.5	920	0.80	565.19	**K43G12A DM71K4**	170/15	35
2.8	815	0.90	501.06	**K43G12B DM71K4**		35
3.2	725	1.00	446.44	**K43G12C DM71K4**		37
3.5	650	1.15	400.77			
4.0	570	1.30	349.80			
4.6	500	1.50	306.38			
5.1	450	1.65	275.54			
5.7	405	1.85	249.26			
6.2	370	2.0	227.20			
7.0	330	2.3	202.69			
7.8	295	2.5	181.81			
8.5	270	2.8	164.95			
9.6	240	3.1	146.17			
11	210	3.6	128.66			
9.3	255	2.9	151.92	**K43A DM71K4**	170	30
				K43B DM71K4		30
				K43C DM71K4		32
4.6	500	0.80	308.06	**K33G12A DM71K4**	169/15	27
5.2	435	0.90	268.88	**K33G12B DM71K4**		27
6.0	385	1.05	235.51	**K33G12C DM71K4**		29
6.7	340	1.15	210.10			
7.5	305	1.30	188.46			
8.2	280	1.45	171.28			
9.3	245	1.65	151.01			
11	215	1.85	133.74			
12	195	2.1	119.69			
14	169	2.4	104.17			
12	205	1.95	120.13	**K33A DM71K4**	169	22
14	175	2.3	103.13	**K33B DM71K4**		22
16	152	2.6	89.71	**K33C DM71K4**		24
18	134	3.0	78.85			
8.9	260	0.80	159.00	**K23G02A DM71K4**	168/15	24
9.9	230	0.90	142.73	**K23G02B DM71K4**		24
11	205	1.00	124.58	**K23G02C DM71K4**		25
13	177	1.15	109.11			
14	173	1.20	102.27	**K23A DM71K4**	168	20
16	148	1.40	87.38	**K23B DM71K4**		20
19	128	1.60	75.61	**K23C DM71K4**		21
21	112	1.80	66.09			
24	99	2.1	58.23			
27	87	2.3	51.62			
31	78	2.6	46.00			
34	70	2.9	41.29			
39	61	3.3	36.04			
45	53	3.8	31.57			
54	44	4.6	26.14			
62	39	5.3	22.85			
70	34	6.0	20.13			
79	30	6.8	17.84			
89	27	7.6	15.90			
99	24	8.4	14.27			
113	21	9.7	12.46			
129	18	11	10.91			
151	16	10	9.34			
170	14	11	8.28			
191	12	13	7.38			
213	11	14	6.63			
244	9.8	16	5.78			
278	8.6	19	5.07			

Helical bevel geared motors K

0.37 kW

n2 [1/min]	T2 [Nm]	cG	i	Type	Dimensions Page	~kg
1.4	2390	1.80	994.22	**K73G32A DM71G4**	173/15	131
1.6	2070	2.1	861.22	**K73G32B DM71G4**		131
1.8	1870	2.3	779.24	**K73G32C DM71G4**		140
2.0	1700	2.5	707.41			
2.2	1520	2.9	630.75			
1.4	2360	1.10	981.68	**K63G22A DM71G4**	172/15	79
1.6	2090	1.20	869.44	**K63G22B DM71G4**		79
1.8	1930	1.30	803.80	**K63G22C DM71G4**		85
1.9	1740	1.45	724.09			
2.2	1530	1.65	634.13			
2.5	1370	1.85	568.80			
2.7	1240	2.1	516.95			
3.1	1100	2.3	455.78			
3.5	970	2.6	403.67			
3.8	900	2.8	373.19			
2.0	1730	0.85	718.94	**K53G22A DM71G4**	171/15	55
2.2	1560	0.90	648.83	**K53G22B DM71G4**		55
2.4	1440	1.00	597.22	**K53G22C DM71G4**		59
2.7	1260	1.15	524.36			
3.0	1130	1.25	470.34			
3.3	1030	1.40	427.46			
3.7	905	1.55	376.88			
4.2	805	1.80	333.79			
4.7	725	1.95	301.24			
5.1	665	2.1	277.28			
5.7	595	2.4	247.82			
6.4	530	2.7	220.06			
7.2	470	3.0	195.01			
4.0	840	0.90	349.80	**K43G12A DM71G4**	170/15	36
4.6	735	1.00	306.38	**K43G12B DM71G4**		36
5.1	665	1.10	275.54	**K43G12C DM71G4**		38
5.7	600	1.25	249.26			
6.2	545	1.35	227.20			
7.0	490	1.50	202.69			
7.8	435	1.70	181.81			
8.5	395	1.85	164.95			
9.6	350	2.1	146.17			
11	310	2.4	128.66			
9.3	380	1.95	151.92	**K43A DM71G4**	170	31
11	330	2.3	131.28	**K43B DM71G4**		31
12	290	2.6	114.99	**K43C DM71G4**		33
14	255	2.9	101.80			
6.7	505	0.80	210.10	**K33G12A DM71G4**	169/15	28
7.5	455	0.90	188.46	**K33G12B DM71G4**		28
8.2	410	0.95	171.28	**K33G12C DM71G4**		30
9.3	365	1.10	151.01			
11	320	1.25	133.74			
12	290	1.40	119.69			
14	250	1.60	104.17			
12	300	1.35	120.13	**K33A DM71G4**	169	23
14	260	1.55	103.13	**K33B DM71G4**		23
16	225	1.75	89.71	**K33C DM71G4**		25
18	198	2.0	78.85			
20	175	2.3	69.88			
23	156	2.6	62.34			
25	140	2.8	55.92			

0.37 kW

n2 [1/min]	T2 [Nm]	cG	i	Type	Dimensions Page	~kg
14	255	0.80	102.27	**K23A DM71G4**	168	21
16	220	0.95	87.38	**K23B DM71G4**		21
19	189	1.10	75.61	**K23C DM71G4**		22
21	166	1.25	66.09			
24	146	1.40	58.23			
27	129	1.60	51.62			
31	115	1.75	46.00			
34	103	1.95	41.29			
39	90	2.3	36.04			
45	79	2.6	31.57			
54	66	3.1	26.14			
62	57	3.6	22.85			
70	50	4.0	20.13			
79	45	4.6	17.84			
89	40	5.1	15.90			
99	36	5.7	14.27			
113	31	6.5	12.46			
129	27	7.5	10.91			
151	23	6.9	9.34			
170	21	7.8	8.28			
191	18	8.7	7.38			
213	17	9.7	6.63			
244	14	11	5.78			
278	13	13	5.07			

0.55 kW

n2 [1/min]	T2 [Nm]	cG	i	Type	Dimensions Page	~kg
1.4	3580	2.2	996.96	**K83G32A DM80K4**	174/15	201
1.5	3250	2.4	906.86	**K83G32B DM80K4**		201
1.7	2930	2.7	816.82	**K83G32C DM80K4**		218
1.4	3570	1.20	994.22	**K73G32A DM80K4**	173/15	133
1.6	3090	1.40	861.22	**K73G32B DM80K4**		133
1.8	2800	1.55	779.24	**K73G32C DM80K4**		142
2.0	2540	1.70	707.41			
2.2	2260	1.90	630.75			
2.4	2110	2.1	587.86			
2.7	1890	2.3	527.31			
2.9	1720	2.5	478.39			
3.4	1490	2.9	414.39			
1.6	3120	0.80	869.44	**K63G22A DM80K4**	172/15	81
1.7	2880	0.90	803.80	**K63G22B DM80K4**		81
1.9	2600	1.00	724.09	**K63G22C DM80K4**		87
2.2	2280	1.10	634.13			
2.5	2040	1.25	568.80			
2.7	1860	1.40	516.95			
3.1	1640	1.55	455.78			
3.5	1450	1.75	403.67			
3.8	1340	1.90	373.19			
4.2	1210	2.1	336.18			
4.7	1080	2.4	301.25			
5.2	970	2.6	269.78			
5.8	870	2.9	242.80			
6.6	760	3.4	211.83			
7.4	680	3.7	189.77			

Helical bevel geared motors K

0.55 kW

n2 [1/min]	T2 [Nm]	cG	i	Type	Dimensions Page	~kg
3.0	1690	0.85	470.34	**K53G22A DM80K4**	171/15	57
3.3	1530	0.95	427.46	**K53G22B DM80K4**		57
3.7	1350	1.05	376.88	**K53G22C DM80K4**		61
4.2	1200	1.20	333.79			
4.7	1080	1.30	301.24			
5.1	995	1.45	277.28			
5.7	890	1.60	247.82			
6.4	790	1.80	220.06			
7.2	700	2.0	195.01			
8.1	625	2.3	173.54			
9.5	535	2.7	148.66			
10	520	2.7	138.94	**K53A DM80K4**	171	51
				K53B DM80K4		51
				K53C DM80K4		55
5.6	895	0.85	249.26	**K43G12A DM80K4**	170/15	38
6.2	815	0.90	227.20	**K43G12B DM80K4**		38
6.9	725	1.00	202.69	**K43G12C DM80K4**		40
7.7	655	1.15	181.81			
8.5	590	1.25	164.95			
9.6	525	1.40	146.17			
11	460	1.60	128.66			
12	430	1.75	114.99	**K43A DM80K4**	170	33
14	380	1.95	101.80	**K43B DM80K4**		33
15	340	2.2	90.90	**K43C DM80K4**		35
17	305	2.4	81.75			
19	275	2.7	73.96			
21	250	2.9	67.41			
11	480	0.85	133.74	**K33G12A DM80K4**	169/15	30
12	430	0.95	119.69	**K33G12B DM80K4**		30
13	375	1.05	104.17	**K33G12C DM80K4**		32
16	335	1.20	89.71	**K33A DM80K4**	169	25
18	295	1.35	78.85	**K33B DM80K4**		25
20	260	1.55	69.88	**K33C DM80K4**		27
23	235	1.70	62.34			
25	210	1.90	55.92			
28	190	2.1	50.82			
31	167	2.4	44.80			
35	148	2.7	39.68			
21	245	0.85	66.09	**K23A DM80K4**	168	23
24	220	0.95	58.23	**K23B DM80K4**		23
27	193	1.05	51.62	**K23C DM80K4**		24
31	172	1.20	46.00			
34	154	1.30	41.29			
39	135	1.50	36.04			
45	118	1.75	31.57			
54	98	2.1	26.14			
61	85	2.4	22.85			
70	75	2.7	20.13			
79	67	3.1	17.84			
88	59	3.4	15.90			
98	53	3.8	14.27			
113	47	4.4	12.46			
129	41	5.0	10.91			
150	35	4.6	9.34			
170	31	5.2	8.28			
190	28	5.8	7.38			
212	25	6.5	6.63			
243	22	7.4	5.78			
277	19	8.5	5.07			

0.75 kW

n2 [1/min]	T2 [Nm]	cG	i	Type	Dimensions Page	~kg
1.4	4820	2.5	988.56	**K93G42A DM80G4**	175/15	309
1.6	4220	2.9	864.99	**K93G42B DM80G4**		309
1.9	3720	3.3	762.02	**K93G42C DM80G4**		325
2.2	3180	3.9	651.55			
1.4	4860	1.65	996.96	**K83G32A DM80G4**	174/15	203
1.6	4420	1.80	906.86	**K83G32B DM80G4**		203
1.7	3980	2.00	816.82	**K83G32C DM80G4**		220
1.4	4850	0.90	994.22	**K73G32A DM80G4**	173/15	135
1.6	4200	1.05	861.22	**K73G32B DM80G4**		135
1.8	3800	1.15	779.24	**K73G32C DM80G4**		144
2.0	3450	1.25	707.41			
2.2	3080	1.40	630.75			
2.4	2870	1.50	587.86			
2.7	2570	1.70	527.31			
2.9	2330	1.85	478.39			
3.4	2020	2.1	414.39			
3.8	1830	2.4	374.95			
4.1	1660	2.6	340.39			
4.6	1480	2.9	303.50			
2.2	3090	0.85	634.13	**K63G22A DM80G4**	172/15	83
2.5	2770	0.90	568.80	**K63G22B DM80G4**		83
2.7	2520	1.00	516.95	**K63G22C DM80G4**		88
3.1	2220	1.15	455.78			
3.5	1970	1.30	403.67			
3.8	1820	1.40	373.19			
4.2	1640	1.55	336.18			
4.7	1470	1.75	301.25			
5.2	1320	1.95	269.78			
5.8	1180	2.2	242.80			
6.7	1030	2.5	211.83			
7.4	925	2.8	189.77			
3.7	1840	0.80	376.88	**K53G22A DM80G4**	171/15	59
4.2	1630	0.90	333.79	**K53G22B DM80G4**		59
4.7	1470	0.95	301.24	**K53G22C DM80G4**		62
5.1	1350	1.05	277.28			
5.7	1210	1.20	247.82			
6.4	1070	1.35	220.06			
7.2	950	1.50	195.01			
8.1	845	1.70	173.54			
9.5	725	1.95	148.66			
10	705	2.0	138.94	**K53A DM80G4**	171	53
11	625	2.3	123.46	**K53B DM80G4**		53
13	560	2.5	110.68	**K53C DM80G4**		56
14	510	2.8	99.94			
7.8	885	0.85	181.81	**K43G12A DM80G4**	170/15	39
8.5	805	0.90	164.95	**K43G12B DM80G4**		39
9.6	715	1.05	146.17	**K43G12C DM80G4**		41
11	625	1.20	128.66			
12	585	1.25	114.99	**K43A DM80G4**	170	35
14	515	1.45	101.80	**K43B DM80G4**		35
16	460	1.60	90.90	**K43C DM80G4**		37
17	415	1.80	81.75			
19	375	2.00	73.96			
21	340	2.2	67.41			
23	305	2.4	60.14			
26	275	2.7	53.94			

Helical bevel geared motors K

0.75 kW

n2 [1/min]	T2 [Nm]	cG	i	Type	Dimensions Page	~kg
14	510	0.80	104.17	**K33G12A DM80G4**	169/15	31
				K33G12B DM80G4		31
				K33G12C DM80G4		34
16	455	0.90	89.71	**K33A DM80G4**	169	27
18	400	1.00	78.85	**K33B DM80G4**		27
20	355	1.10	69.88	**K33C DM80G4**		29
23	315	1.25	62.34			
25	285	1.40	55.92			
28	260	1.55	50.82			
31	230	1.75	44.80			
36	200	2.00	39.68			
52	138	2.9	27.26			
27	260	0.80	51.62	**K23A DM80G4**	168	24
31	235	0.85	46.00	**K23B DM80G4**		24
34	210	0.95	41.29	**K23C DM80G4**		26
39	183	1.10	36.04			
45	160	1.25	31.57			
54	133	1.55	26.14			
62	116	1.75	22.85			
70	102	2.00	20.13			
79	91	2.3	17.84			
89	81	2.5	15.90			
99	73	2.8	14.27			
113	63	3.2	12.46			
129	55	3.7	10.91			
151	47	3.4	9.34			
170	42	3.8	8.28			
191	37	4.3	7.38			
213	34	4.8	6.63			
244	29	5.5	5.78			
278	26	6.3	5.07			

1.1 kW

n2 [1/min]	T2 [Nm]	cG	i	Type	Dimensions Page	~kg
1.4	7050	1.75	988.56	**K93G42A DM90S4**	175/15	311
1.6	6160	2.00	864.99	**K93G42B DM90S4**		311
1.9	5430	2.3	762.02	**K93G42C DM90S4**		328
2.2	4640	2.6	651.55			
2.2	4500	2.7	631.60			
1.4	7110	1.10	996.96	**K83G32A DM90S4**	174/15	205
1.6	6460	1.25	906.86	**K83G32B DM90S4**		205
1.7	5820	1.35	816.82	**K83G32C DM90S4**		222
1.8	5520	1.45	774.35			
2.0	5030	1.60	705.34			
2.3	4400	1.80	617.84			
2.6	3890	2.0	545.46			
2.9	3440	2.3	483.36			
3.3	3030	2.6	425.46			
3.8	2660	3.0	372.59			

1.1 kW

n2 [1/min]	T2 [Nm]	cG	i	Type	Dimensions Page	~kg
1.8	5550	0.80	779.24	**K73G32A DM90S4**	173/15	137
2.0	5040	0.85	707.41	**K73G32B DM90S4**		137
2.2	4500	0.95	630.75	**K73G32C DM90S4**		146
2.4	4190	1.05	587.86			
2.7	3760	1.15	527.31			
3.0	3410	1.25	478.39			
3.4	2950	1.45	414.39			
3.8	2670	1.60	374.95			
4.2	2430	1.80	340.39			
4.7	2160	2.0	303.50			
5.5	1830	2.4	256.81			
6.1	1660	2.6	232.36			
6.7	1500	2.9	210.95			
3.1	3250	0.80	455.78	**K63G22A DM90S4**	172/15	85
3.5	2880	0.90	403.67	**K63G22B DM90S4**		85
3.8	2660	0.95	373.19	**K63G22C DM90S4**		90
4.2	2400	1.05	336.18			
4.7	2150	1.20	301.25			
5.2	1920	1.35	269.78			
5.8	1730	1.45	242.80			
6.0	1670	1.55	234.63			
6.7	1510	1.70	211.83			
6.7	1500	1.70	210.12			
7.5	1350	1.90	189.77			
7.5	1350	1.90	189.10			
8.8	1190	2.1	160.53	**K63A DM90S4**	172	80
9.8	1070	2.4	144.48	**K63B DM90S4**		80
11	970	2.6	130.99	**K63C DM90S4**		86
12	885	2.9	119.50			
5.7	1770	0.80	247.82	**K53G22A DM90S4**	171/15	61
6.4	1570	0.90	220.06	**K53G22B DM90S4**		61
7.3	1390	1.05	195.01	**K53G22C DM90S4**		64
8.2	1240	1.15	173.54			
9.5	1060	1.35	148.66			
10	965	1.50	135.16			
11	915	1.55	123.46	**K53A DM90S4**	171	55
13	820	1.75	110.68	**K53B DM90S4**		55
14	740	1.90	99.94	**K53C DM90S4**		59
16	675	2.1	90.79			
17	615	2.3	83.01			
19	555	2.6	74.48			
21	500	2.9	67.22			
14	755	1.00	101.80	**K43A DM90S4**	170	37
16	675	1.10	90.90	**K43B DM90S4**		37
17	605	1.20	81.75	**K43C DM90S4**		39
19	550	1.35	73.96			
21	500	1.50	67.41			
24	445	1.65	60.14			
26	400	1.85	53.94			
29	365	2.0	48.94			
33	320	2.3	43.37			
37	285	2.6	38.17			
42	250	3.0	33.43			

Helical bevel geared motors K

1.1 kW

n2 [1/min]	T2 [Nm]	cG	i	Type	Dimensions Page	~kg
23	465	0.85	62.34	**K33A DM90S4**	169	29
25	415	0.95	55.92	**K33B DM90S4**		29
28	375	1.05	50.82	**K33C DM90S4**		31
32	335	1.20	44.80			
36	295	1.35	39.68			
40	265	1.50	35.51			
46	230	1.75	30.91			
52	200	1.95	27.26			
59	179	2.2	24.15			
66	160	2.5	21.55			
73	143	2.8	19.33			
45	235	0.85	31.57	**K23A DM90S4**	168	27
62	170	1.20	22.85	**K23B DM90S4**		27
70	149	1.35	20.13	**K23C DM90S4**		28
79	132	1.55	17.84			
89	118	1.75	15.90			
99	106	1.95	14.27			
114	92	2.2	12.46			
130	81	2.5	10.91			
151	69	2.3	9.34			
171	62	2.6	8.28			
192	55	2.9	7.38			
214	49	3.3	6.63			
245	43	3.7	5.78			
279	38	4.3	5.07			

1.5 kW

n2 [1/min]	T2 [Nm]	cG	i	Type	Dimensions Page	~kg
1.4	9640	1.25	988.56	**K93G42A DM90L4**	175/15	314
1.6	8440	1.45	864.99	**K93G42B DM90L4**		314
1.9	7430	1.65	762.02	**K93G42C DM90L4**		331
2.2	6350	1.95	651.55			
2.2	6160	2.00	631.60			
2.5	5470	2.2	560.85			
2.8	4850	2.5	497.00			
3.1	4430	2.8	454.31			
3.4	4050	3.0	414.77			
1.4	9720	0.80	996.96	**K83G32A DM90L4**	174/15	208
1.6	8840	0.90	906.86	**K83G32B DM90L4**		208
1.7	7970	1.00	816.82	**K83G32C DM90L4**		225
1.8	7550	1.05	774.35			
2.0	6880	1.15	705.34			
2.3	6030	1.30	617.84			
2.6	5320	1.50	545.46			
2.9	4710	1.70	483.36			
3.3	4150	1.90	425.46			
3.8	3630	2.2	372.59			
7.5	1830	4.2	187.60			
2.7	5140	0.85	527.31	**K73G32A DM90L4**	173/15	140
2.9	4670	0.95	478.39	**K73G32B DM90L4**		140
3.4	4040	1.05	414.39	**K73G32C DM90L4**		149
3.8	3660	1.20	374.95			
4.1	3320	1.30	340.39			
4.6	2960	1.45	303.50			
5.5	2500	1.75	256.81			
6.1	2270	1.90	232.36			
6.7	2060	2.1	210.95			
7.5	1830	2.4	188.09			

1.5 kW

n2 [1/min]	T2 [Nm]	cG	i	Type	Dimensions Page	~kg
7.7	1860	2.3	183.21	**K73A DM90L4**	173	132
8.5	1690	2.6	166.63	**K73B DM90L4**		132
9.2	1550	2.8	152.50	**K73C DM90L4**		141
10.0	1440	3.0	141.34			
4.2	3280	0.80	336.18	**K63G22A DM90L4**	172/15	88
4.7	2940	0.85	301.25	**K63G22B DM90L4**		88
5.2	2630	0.95	269.78	**K63G22C DM90L4**		93
5.8	2370	1.10	242.80			
6.0	2290	1.10	234.63			
6.7	2070	1.25	211.83			
6.7	2050	1.25	210.12			
7.4	1850	1.40	189.77			
7.5	1840	1.40	189.10			
8.8	1630	1.55	160.53	**K63A DM90L4**	172	83
9.8	1470	1.75	144.48	**K63B DM90L4**		83
11	1330	1.90	130.99	**K63C DM90L4**		89
12	1210	2.1	119.50			
13	1120	2.3	109.93			
14	1010	2.5	99.21			
16	915	2.8	90.07			
8.1	1690	0.85	173.54	**K53G22A DM90L4**	171/15	64
9.5	1450	1.00	148.66	**K53G22B DM90L4**		64
10	1320	1.10	135.16	**K53G22C DM90L4**		67
11	1250	1.15	123.46	**K53A DM90L4**	171	58
13	1120	1.25	110.68	**K53B DM90L4**		58
14	1020	1.40	99.94	**K53C DM90L4**		62
16	920	1.55	90.79			
17	845	1.70	83.01			
19	755	1.90	74.48			
21	685	2.1	67.22			
23	630	2.3	61.87			
25	560	2.5	55.30			
29	500	2.9	49.10			
16	925	0.80	90.90	**K43A DM90L4**	170	40
17	830	0.90	81.75	**K43B DM90L4**		40
19	750	1.00	73.96	**K43C DM90L4**		42
21	685	1.10	67.41			
23	610	1.20	60.14			
26	550	1.35	53.94			
29	495	1.50	48.94			
33	440	1.70	43.37			
37	390	1.90	38.17			
42	340	2.2	33.43			
55	260	2.9	25.56			
31	455	0.90	44.80	**K33A DM90L4**	169	32
36	405	1.00	39.68	**K33B DM90L4**		32
40	360	1.10	35.51	**K33C DM90L4**		34
46	315	1.25	30.91			
52	275	1.45	27.26			
58	245	1.65	24.15			
65	220	1.80	21.55			
73	196	2.0	19.33			
80	178	2.2	17.57			
91	157	2.5	15.49			
103	139	2.9	13.72			

Helical bevel geared motors K

1.5 kW

n2 [1/min]	T2 [Nm]	cG	i	Type	Dimensions Page	~kg
62	230	0.90	22.85	**K23A DM90L4**	168	30
70	205	1.00	20.13	**K23B DM90L4**		30
79	181	1.15	17.84	**K23C DM90L4**		31
89	162	1.25	15.90			
99	145	1.40	14.27			
113	127	1.60	12.46			
129	111	1.85	10.91			
151	95	1.70	9.34			
170	84	1.90	8.28			
191	75	2.1	7.38			
213	67	2.4	6.63			
244	59	2.7	5.78			
278	51	3.1	5.07			

2.2 kW

n2 [1/min]	T2 [Nm]	cG	i	Type	Dimensions Page	~kg
1.4	14100	0.85	988.56	**K93G42A DM100L4**	175/15	319
1.6	12400	1.00	864.99	**K93G42B DM100L4**		319
1.9	10900	1.10	762.02	**K93G42C DM100L4**		336
2.2	9320	1.30	651.55			
2.2	9030	1.35	631.60			
2.5	8020	1.55	560.85			
2.8	7110	1.70	497.00			
3.1	6500	1.90	454.31			
3.4	5930	2.1	414.77			
3.8	5360	2.3	375.01			
4.3	4650	2.6	325.31			
5.0	4070	3.0	284.64			
2.0	10100	0.80	705.34	**K83G32A DM100L4**	174/15	214
2.3	8840	0.90	617.84	**K83G32B DM100L4**		214
2.6	7800	1.00	545.46	**K83G32C DM100L4**		231
2.9	6910	1.15	483.36			
3.3	6090	1.30	425.46			
3.8	5330	1.50	372.59			
4.3	4680	1.70	327.28			
4.7	4260	1.85	298.11			
5.4	3740	2.1	261.13			
5.9	3400	2.3	237.53			
6.6	3060	2.6	213.95			
7.3	2750	2.9	192.10			
7.5	2680	2.9	187.60			
8.6	2360	3.0	164.78			
3.8	5360	0.80	374.95	**K73G32A DM100L4**	173/15	146
4.1	4870	0.90	340.39	**K73G32B DM100L4**		146
4.6	4340	1.00	303.50	**K73G32C DM100L4**		155
5.5	3670	1.20	256.81			
6.1	3320	1.30	232.36			
6.7	3020	1.45	210.95			
7.5	2690	1.60	188.09			
7.7	2730	1.60	183.21	**K73A DM100L4**	173	137
8.5	2480	1.75	166.63	**K73B DM100L4**		137
9.2	2270	1.90	152.50	**K73C DM100L4**		146
10.0	2110	2.1	141.34			
11	1910	2.3	128.10			
12	1740	2.5	116.83			
13	1610	2.7	108.36			
14	1460	3.0	98.17			

2.2 kW

n2 [1/min]	T2 [Nm]	cG	i	Type	Dimensions Page	~kg
6.7	3030	0.85	211.83	**K63G22A DM100L4**	172/15	94
6.7	3010	0.85	210.12	**K63G22B DM100L4**		94
7.4	2710	0.95	189.77	**K63G22C DM100L4**		100
7.5	2710	0.95	189.10			
9.8	2150	1.20	144.48	**K63A DM100L4**	172	88
11	1950	1.30	130.99	**K63B DM100L4**		88
12	1780	1.45	119.50	**K63C DM100L4**		94
13	1640	1.55	109.93			
14	1480	1.75	99.21			
16	1340	1.90	90.07			
17	1240	2.1	83.27			
19	1120	2.3	75.02			
21	1000	2.5	67.22			
23	895	2.8	60.20			
13	1650	0.85	110.68	**K53A DM100L4**	171	63
14	1490	0.95	99.94	**K53B DM100L4**		63
16	1350	1.05	90.79	**K53C DM100L4**		67
17	1240	1.15	83.01			
19	1110	1.30	74.48			
21	1000	1.45	67.22			
23	920	1.55	61.87			
25	825	1.75	55.30			
29	730	1.95	49.10			
32	650	2.2	43.51			
36	575	2.5	38.72			
23	895	0.85	60.14	**K43A DM100L4**	170	46
26	805	0.90	53.94	**K43B DM100L4**		46
29	730	1.00	48.94	**K43C DM100L4**		48
33	645	1.15	43.37			
37	570	1.30	38.17			
42	500	1.50	33.43			
48	440	1.70	29.37			
55	380	1.95	25.56			
61	345	2.1	23.30			
68	310	2.4	20.79			
76	280	2.7	18.65			
83	250	2.9	16.92			
94	225	3.3	14.99			
46	460	0.85	30.91	**K33A DM100L4**	169	38
58	360	1.10	24.15	**K33B DM100L4**		38
65	320	1.25	21.55	**K33C DM100L4**		40
73	290	1.40	19.33			
80	260	1.50	17.57			
91	230	1.75	15.49			
103	205	1.95	13.72			
115	183	2.1	12.27			
132	159	2.4	10.68			
152	139	1.75	9.30			
167	126	2.4	8.45			
189	111	2.6	7.45			
214	98	2.8	6.60			
239	88	3.4	5.91			
274	77	3.8	5.14			

Helical bevel geared motors K

3.0 kW

n2 [1/min]	T2 [Nm]	cG	i	Type	Dimensions Page	~kg
1.9	14900	0.80	762.02	**K93G42A DM100LX4**	175/15	322
2.2	12700	0.95	651.55	**K93G42B DM100LX4**		322
2.2	12300	1.00	631.60	**K93G42C DM100LX4**		339
2.5	10900	1.10	560.85			
2.8	9690	1.25	497.00			
3.1	8860	1.40	454.31			
3.4	8090	1.50	414.77			
3.8	7320	1.65	375.01			
4.3	6350	1.95	325.31			
5.0	5550	2.2	284.64			
2.9	9430	0.85	483.36	**K83G32A DM100LX4**	174/15	217
3.3	8300	0.95	425.46	**K83G32B DM100LX4**		217
3.8	7270	1.10	372.59	**K83G32C DM100LX4**		234
4.3	6380	1.25	327.28			
4.7	5820	1.35	298.11			
5.4	5090	1.55	261.13			
5.9	4630	1.70	237.53			
6.6	4170	1.90	213.95			
7.3	3750	2.1	192.10			
7.5	3660	2.1	187.60			
8.6	3210	2.2	164.78			
9.7	2940	2.7	144.68	**K83A DM100LX4**	174	214
11	2690	3.0	132.28	**K83B DM100LX4**		214
				K83C DM100LX4		231
5.5	5010	0.85	256.81	**K73G32A DM100LX4**	173/15	149
6.1	4530	0.95	232.36	**K73G32B DM100LX4**		149
6.7	4110	1.05	210.95	**K73G32C DM100LX4**		158
7.5	3670	1.20	188.09			
7.7	3720	1.15	183.21	**K73A DM100LX4**	173	140
8.5	3390	1.30	166.63	**K73B DM100LX4**		140
9.2	3100	1.40	152.50	**K73C DM100LX4**		149
10.0	2870	1.50	141.34			
11	2600	1.65	128.10			
12	2370	1.80	116.83			
13	2200	1.95	108.36			
14	1990	2.2	98.17			
16	1810	2.4	89.29			
17	1640	2.6	80.57			
19	1490	2.9	73.10			
9.8	2940	0.85	144.48	**K63A DM100LX4**	172	91
11	2660	0.95	130.99	**K63B DM100LX4**		91
12	2430	1.05	119.50	**K63C DM100LX4**		97
13	2230	1.15	109.93			
14	2020	1.25	99.21			
16	1830	1.40	90.07			
17	1690	1.50	83.27			
19	1520	1.65	75.02			
21	1370	1.85	67.22			
23	1220	2.1	60.20			
26	1100	2.3	54.18			

3.0 kW

n2 [1/min]	T2 [Nm]	cG	i	Type	Dimensions Page	~kg
17	1690	0.85	83.01	**K53A DM100LX4**	171	66
19	1510	0.95	74.48	**K53B DM100LX4**		66
21	1370	1.05	67.22	**K53C DM100LX4**		70
23	1260	1.15	61.87			
25	1120	1.25	55.30			
29	1000	1.45	49.10			
32	885	1.60	43.51			
36	785	1.80	38.72			
48	600	2.4	29.56			
53	540	2.6	26.68			
57	500	2.9	24.56			
33	880	0.85	43.37	**K43A DM100LX4**	170	49
37	775	0.95	38.17	**K43B DM100LX4**		49
42	680	1.10	33.43	**K43C DM100LX4**		51
48	595	1.25	29.37			
55	520	1.45	25.56			
61	475	1.55	23.30			
68	420	1.75	20.79			
76	380	1.95	18.65			
83	345	2.2	16.92			
94	305	2.4	14.99			
107	270	2.8	13.20			
122	235	3.2	11.56			
139	205	3.6	10.15			
164	175	3.2	8.60			
185	155	3.5	7.62			
58	490	0.80	24.15	**K33A DM100LX4**	169	41
65	440	0.90	21.55	**K33B DM100LX4**		41
73	395	1.00	19.33	**K33C DM100LX4**		43
80	355	1.10	17.57			
91	315	1.25	15.49			
103	280	1.45	13.72			
115	250	1.55	12.27			
132	215	1.75	10.68			
152	189	1.30	9.30			
167	172	1.75	8.45			
189	151	1.90	7.45			
214	134	2.1	6.60			
239	120	2.5	5.91			
274	104	2.8	5.14			

4.0 kW

n2 [1/min]	T2 [Nm]	cG	i	Type	Dimensions Page	~kg
2.5	14400	0.85	560.85	**K93G42A DM112M4**	175/15	329
2.9	12800	0.95	497.00	**K93G42B DM112M4**		329
3.1	11700	1.05	454.31	**K93G42C DM112M4**		345
3.4	10700	1.15	414.77			
3.8	9650	1.25	375.01			
4.4	8370	1.45	325.31			
5.0	7330	1.65	284.64			
3.8	9590	0.85	372.59	**K83G32A DM112M4**	174/15	224
4.4	8420	0.95	327.28	**K83G32B DM112M4**		224
4.8	7670	1.05	298.11	**K83G32C DM112M4**		240
5.5	6720	1.20	261.13			
6.0	6110	1.30	237.53			
6.7	5510	1.45	213.95			
7.4	4940	1.60	192.10			
7.6	4830	1.60	187.60			
8.6	4240	1.65	164.78			

Helical bevel geared motors K

4.0 kW

n2 [1/min]	T2 [Nm]	cG	i	Type	Dimensions Page	~kg
9.8	3880	2.1	144.68	**K83A DM112M4**	174	220
11	3550	2.2	132.28	**K83B DM112M4**		220
12	3280	2.4	122.27	**K83C DM112M4**		237
13	2980	2.7	111.12			
14	2720	2.9	101.42			
6.8	5430	0.80	210.95	**K73G32A DM112M4**	173/15	156
7.6	4840	0.90	188.09	**K73G32B DM112M4**		156
				K73G32C DM112M4		165
8.6	4470	0.95	166.63	**K73A DM112M4**	173	147
9.3	4090	1.05	152.50	**K73B DM112M4**		147
10	3790	1.15	141.34	**K73C DM112M4**		156
11	3430	1.25	128.10			
12	3130	1.40	116.83			
13	2900	1.50	108.36			
15	2630	1.65	98.17			
16	2390	1.80	89.29			
18	2160	2.0	80.57			
19	1960	2.2	73.10			
12	3200	0.80	119.50	**K63A DM112M4**	172	98
13	2950	0.85	109.93	**K63B DM112M4**		98
14	2660	0.95	99.21	**K63C DM112M4**		104
16	2410	1.05	90.07			
17	2230	1.15	83.27			
19	2010	1.25	75.02			
21	1800	1.40	67.22			
24	1610	1.60	60.20			
26	1450	1.75	54.18			
21	1800	0.80	67.22	**K53A DM112M4**	171	73
23	1660	0.85	61.87	**K53B DM112M4**		73
26	1480	0.95	55.30	**K53C DM112M4**		76
29	1320	1.10	49.10			
33	1170	1.20	43.51			
37	1040	1.40	38.72			
48	790	1.80	29.56			
53	715	2.00	26.68			
58	660	2.2	24.56			
65	590	2.4	21.95			
73	520	2.7	19.49			
83	465	3.0	17.27			
93	410	3.2	15.37			
133	290	3.4	10.75			
43	895	0.85	33.43	**K43A DM112M4**	170	56
49	785	0.95	29.37	**K43B DM112M4**		56
56	685	1.10	25.56	**K43C DM112M4**		58
61	625	1.20	23.30			
69	555	1.35	20.79			
76	500	1.50	18.65			
84	455	1.65	16.92			
95	400	1.85	14.99			
108	355	2.1	13.20			
123	310	2.4	11.56			
140	270	2.7	10.15			
166	230	2.5	8.60			
187	205	2.7	7.62			
212	180	3.2	6.71			
243	157	3.5	5.87			
276	138	3.8	5.16			

4.0 kW

n2 [1/min]	T2 [Nm]	cG	i	Type	Dimensions Page	~kg
81	470	0.85	17.57	**K33A DM112M4**	169	47
92	415	0.95	15.49	**K33B DM112M4**		47
104	370	1.10	13.72	**K33C DM112M4**		49
116	330	1.20	12.27			
133	285	1.30	10.68			
153	250	0.95	9.30			
169	225	1.30	8.45			
191	200	1.45	7.45			
216	177	1.55	6.60			
241	158	1.90	5.91			
277	138	2.1	5.14			

5.5 kW

n2 [1/min]	T2 [Nm]	cG	i	Type	Dimensions Page	~kg
3.2	15800	0.80	454.31	**K93G42A DA132S4**	175/15	342
3.5	14400	0.85	414.77	**K93G42B DA132S4**		342
3.9	13000	0.95	375.01	**K93G42C DA132S4**		359
4.5	11300	1.10	325.31			
5.1	9900	1.25	284.64			
5.8	8770	1.40	252.16			
6.6	7610	1.60	218.74			
7.6	6660	1.85	191.40			
8.6	5860	2.1	168.61			
10	5010	2.4	144.17			
11	4980	2.5	137.36	**K93A DA132S4**	175	327
12	4570	2.7	126.06	**K93B DA132S4**		327
13	4150	3.0	114.62	**K93C DA132S4**		344
5.6	9080	0.90	261.13	**K83G32A DA132S4**	174/15	237
6.1	8260	0.95	237.53	**K83G32B DA132S4**		237
6.8	7440	1.05	213.95	**K83G32C DA132S4**		254
7.5	6680	1.20	192.10			
7.7	6520	1.20	187.60			
8.8	5730	1.25	164.78			
10	5240	1.50	144.68	**K83A DA132S4**	174	232
11	4790	1.65	132.28	**K83B DA132S4**		232
12	4430	1.80	122.27	**K83C DA132S4**		249
13	4030	2.00	111.12			
14	3670	2.2	101.42			
16	3330	2.4	91.87			
17	3030	2.6	83.68			
20	2660	3.0	73.30			
11	4640	0.95	128.10	**K73A DA132S4**	173	161
12	4230	1.00	116.83	**K73B DA132S4**		161
13	3930	1.10	108.36	**K73C DA132S4**		170
15	3560	1.20	98.17			
16	3230	1.35	89.29			
18	2920	1.50	80.57			
20	2650	1.65	73.10			
23	2290	1.90	63.32			
25	2080	2.1	57.29			
28	1880	2.3	52.01			
31	1680	2.6	46.38			
33	1590	2.7	43.99			
36	1450	3.0	40.01			

Helical bevel geared motors K

5.5 kW

n2 [1/min]	T2 [Nm]	cG	i	Type	Dimensions Page	~kg
16	3260	0.80	90.07	**K63A DA132S4**	172	111
17	3020	0.85	83.27	**K63B DA132S4**		111
19	2720	0.95	75.02	**K63C DA132S4**		117
22	2440	1.05	67.22			
24	2180	1.15	60.20			
27	1960	1.30	54.18			
31	1710	1.50	47.27			
34	1530	1.65	42.35			
39	1360	1.90	37.56			
44	1200	2.1	33.00			
49	1080	2.4	29.77			
54	965	2.6	26.68			
61	865	2.9	23.89			
30	1780	0.80	49.10	**K53A DA132S4**	171	87
33	1580	0.90	43.51	**K53B DA132S4**		87
37	1400	1.00	38.72	**K53C DA132S4**		90
44	1200	1.20	33.17			
49	1070	1.35	29.56			
54	965	1.50	26.68			
59	890	1.60	24.56			
66	795	1.80	21.95			
74	705	2.0	19.49			
84	625	2.2	17.27			
94	555	2.4	15.37			
110	475	2.6	13.17			
125	420	2.9	11.61			
135	390	2.5	10.75			
152	345	2.9	9.55			
171	305	3.2	8.46			
193	275	3.6	7.53			
225	235	4.1	6.45			
70	755	1.00	20.79	**K43A DA132S4**	170	69
78	675	1.10	18.65	**K43B DA132S4**		69
86	615	1.20	16.92	**K43C DA132S4**		71
97	545	1.35	14.99			
110	480	1.55	13.20			
125	420	1.75	11.56			
143	370	2.0	10.15			
169	310	1.80	8.60			
190	275	2.00	7.62			
216	245	2.4	6.71			
247	215	2.6	5.87			
281	187	2.8	5.16			

7.5 kW

n2 [1/min]	T2 [Nm]	cG	i	Type	Dimensions Page	~kg
4.5	15400	0.80	325.31	**K93G42A DA132M4**	175/15	347
5.1	13500	0.90	284.64	**K93G42B DA132M4**		347
5.8	12000	1.00	252.16	**K93G42C DA132M4**		363
6.6	10400	1.20	218.74			
7.6	9080	1.35	191.40			
8.6	8000	1.55	168.61			
10	6840	1.80	144.17			
11	6790	1.80	137.36	**K93A DA132M4**	175	332
12	6230	1.95	126.06	**K93B DA132M4**		332
13	5660	2.2	114.62	**K93C DA132M4**		348
14	5180	2.4	104.80			
16	4580	2.7	92.68			
17	4180	2.9	84.72			

7.5 kW

n2 [1/min]	T2 [Nm]	cG	i	Type	Dimensions Page	~kg
10	7150	1.10	144.68	**K83A DA132M4**	174	237
11	6530	1.20	132.28	**K83B DA132M4**		237
12	6040	1.30	122.27	**K83C DA132M4**		253
13	5490	1.45	111.12			
14	5010	1.60	101.42			
16	4540	1.75	91.87			
17	4130	1.90	83.68			
20	3620	2.2	73.30			
22	3290	2.4	66.68			
24	2970	2.7	60.06			
27	2660	3.0	53.92			
13	5350	0.80	108.36	**K73A DA132M4**	173	165
15	4850	0.90	98.17	**K73B DA132M4**		165
16	4410	1.00	89.29	**K73C DA132M4**		174
18	3980	1.10	80.57			
20	3610	1.20	73.10			
23	3130	1.40	63.32			
25	2830	1.55	57.29			
28	2570	1.70	52.01			
31	2290	1.90	46.38			
33	2170	2.00	43.99			
36	1980	2.2	40.01			
40	1780	2.4	36.10			
44	1620	2.7	32.75			
51	1400	3.1	28.37			
24	2970	0.85	60.20	**K63A DA132M4**	172	116
27	2680	0.95	54.18	**K63B DA132M4**		116
31	2330	1.10	47.27	**K63C DA132M4**		121
34	2090	1.20	42.35			
39	1860	1.40	37.56			
44	1630	1.55	33.00			
49	1470	1.75	29.77			
54	1320	1.95	26.68			
61	1180	2.1	23.89			
67	1060	2.3	21.50			
77	925	2.5	18.76			
86	830	2.7	16.81			
97	735	2.9	14.91			
111	645	3.2	13.10			
125	570	3.0	11.58			
44	1640	0.85	33.17	**K53A DA132M4**	171	91
49	1460	1.00	29.56	**K53B DA132M4**		91
54	1320	1.10	26.68	**K53C DA132M4**		94
59	1210	1.20	24.56			
66	1080	1.30	21.95			
74	965	1.50	19.49			
84	855	1.60	17.27			
94	760	1.75	15.37			
110	650	1.95	13.17			
125	575	2.1	11.61			
135	530	1.85	10.75			
152	470	2.1	9.55			
171	420	2.4	8.46			
193	370	2.7	7.53			
225	320	3.0	6.45			
255	280	3.3	5.69			

Helical bevel geared motors K

7.5 kW

n2 [1/min]	T2 [Nm]	cG	i	Type	Dimensions Page	~kg
78	920	0.80	18.65	**K43A DA132M4**	170	73
86	835	0.90	16.92	**K43B DA132M4**		73
97	740	1.00	14.99	**K43C DA132M4**		75
110	650	1.15	13.20			
125	570	1.30	11.56			
143	500	1.50	10.15			
169	425	1.35	8.60			
190	375	1.45	7.62			
216	330	1.75	6.71			
247	290	1.90	5.87			
281	255	2.0	5.16			

9.2 kW

n2 [1/min]	T2 [Nm]	cG	i	Type	Dimensions Page	~kg
5.8	14500	0.85	252.16	**K93G42A DA160MS4**	175/15	368
6.7	12600	1.00	218.74	**K93G42B DA160MS4**		368
7.7	11000	1.10	191.40	**K93G42C DA160MS4**		385
8.7	9670	1.25	168.61			
10	8270	1.50	144.17			
11	8210	1.50	137.36	**K93A DA160MS4**	175	351
12	7530	1.65	126.06	**K93B DA160MS4**		351
13	6850	1.80	114.62	**K93C DA160MS4**		368
14	6260	1.95	104.80			
16	5540	2.2	92.68			
17	5060	2.4	84.72			
19	4620	2.7	77.34			
21	4180	2.9	69.93			
13	6640	1.20	111.12	**K83A DA160MS4**	174	256
14	6060	1.30	101.42	**K83B DA160MS4**		256
16	5490	1.45	91.87	**K83C DA160MS4**		273
18	5000	1.60	83.68			
20	4380	1.80	73.30			
22	3990	2.00	66.68			
24	3590	2.2	60.06			
27	3220	2.5	53.92			
32	2760	2.9	46.25			
16	5340	0.80	89.29	**K73A DA160MS4**	173	186
18	4820	0.90	80.57	**K73B DA160MS4**		186
20	4370	1.00	73.10	**K73C DA160MS4**		195
23	3780	1.15	63.32			
26	3420	1.25	57.29			
28	3110	1.40	52.01			
32	2770	1.55	46.38			
33	2630	1.65	43.99			
37	2390	1.80	40.01			
41	2160	2.0	36.10			
45	1960	2.2	32.75			
52	1700	2.6	28.37			
57	1530	2.8	25.67			
63	1390	3.1	23.31			
71	1240	3.5	20.78			

9.2 kW

n2 [1/min]	T2 [Nm]	cG	i	Type	Dimensions Page	~kg
27	3240	0.80	54.18	**K63A DA160MS4**	172	137
31	2830	0.90	47.27	**K63B DA160MS4**		137
35	2530	1.00	42.35	**K63C DA160MS4**		143
39	2250	1.15	37.56			
45	1970	1.25	33.00			
49	1780	1.45	29.77			
55	1590	1.60	26.68			
62	1430	1.75	23.89			
68	1290	1.85	21.50			
78	1120	2.1	18.76			
87	1000	2.2	16.81			
99	890	2.4	14.91			
112	785	2.6	13.10			
127	690	2.5	11.58			
141	625	2.7	10.43			
67	1310	1.10	21.95	**K53A DA160MS4**	171	112
75	1160	1.20	19.49	**K53B DA160MS4**		112
85	1030	1.35	17.27	**K53C DA160MS4**		116
96	920	1.45	15.37			
112	785	1.60	13.17			
127	695	1.75	11.61			
137	645	1.55	10.75			
154	570	1.75	9.55			
174	505	1.95	8.46			
195	450	2.2	7.53			
228	385	2.5	6.45			
258	340	2.7	5.69			

11.0 kW

n2 [1/min]	T2 [Nm]	cG	i	Type	Dimensions Page	~kg
6.7	15000	0.80	218.74	**K93G42A DA160M4**	175/15	368
7.7	13100	0.95	191.40	**K93G42B DA160M4**		368
8.7	11600	1.05	168.61	**K93G42C DA160M4**		385
10	9890	1.25	144.17			
11	9820	1.25	137.36	**K93A DA160M4**	175	351
12	9010	1.35	126.06	**K93B DA160M4**		351
13	8190	1.50	114.62	**K93C DA160M4**		368
14	7490	1.65	104.80			
16	6620	1.85	92.68			
17	6050	2.0	84.72			
19	5530	2.2	77.34			
21	5000	2.5	69.93			
24	4340	2.8	60.66			
13	7940	1.00	111.12	**K83A DA160M4**	174	256
14	7250	1.10	101.42	**K83B DA160M4**		256
16	6570	1.20	91.87	**K83C DA160M4**		273
18	5980	1.35	83.68			
20	5240	1.50	73.30			
22	4760	1.65	66.68			
24	4290	1.85	60.06			
27	3850	2.1	53.92			
32	3310	2.4	46.25			
37	2860	2.8	39.98			
45	2350	3.4	32.84			

Helical bevel geared motors K

n2 [1/min]	T2 [Nm]	cG	i	Type	Dimensions Page	~kg
11.0 kW						
20	5220	0.85	73.10	**K73A DA160M4**	173	186
23	4520	0.95	63.32	**K73B DA160M4**		186
26	4090	1.05	57.29	**K73C DA160M4**		195
28	3720	1.15	52.01			
32	3310	1.30	46.38			
33	3140	1.40	43.99			
37	2860	1.50	40.01			
41	2580	1.70	36.10			
45	2340	1.85	32.75			
52	2030	2.1	28.37			
57	1830	2.4	25.67			
63	1670	2.6	23.31			
71	1480	2.9	20.78			
83	1260	3.4	17.62			
35	3030	0.85	42.35	**K63A DA160M4**	172	137
39	2680	0.95	37.56	**K63B DA160M4**		137
45	2360	1.05	33.00	**K63C DA160M4**		143
49	2130	1.20	29.77			
55	1910	1.35	26.68			
62	1710	1.45	23.89			
68	1540	1.55	21.50			
78	1340	1.70	18.76			
87	1200	1.85	16.81			
99	1070	2.0	14.91			
112	935	2.2	13.10			
127	830	2.1	11.58			
141	745	2.2	10.43			
162	650	2.6	9.10			
180	580	2.9	8.15			
67	1570	0.90	21.95	**K53A DA160M4**	171	112
75	1390	1.00	19.49	**K53B DA160M4**		112
85	1230	1.10	17.27	**K53C DA160M4**		116
96	1100	1.20	15.37			
112	940	1.35	13.17			
127	830	1.45	11.61			
137	770	1.30	10.75			
154	680	1.45	9.55			
174	605	1.65	8.46			
195	540	1.85	7.53			
228	460	2.1	6.45			
258	405	2.3	5.69			
15.0 kW						
11	13400	0.90	137.36	**K93A DA160L4**	175	370
12	12300	1.00	126.06	**K93B DA160L4**		370
13	11200	1.10	114.62	**K93C DA160L4**		387
14	10200	1.20	104.80			
16	9030	1.35	92.68			
17	8260	1.50	84.72			
19	7540	1.65	77.34			
21	6810	1.80	69.93			
24	5910	2.1	60.66			
28	5170	2.4	53.08			

n2 [1/min]	T2 [Nm]	cG	i	Type	Dimensions Page	~kg
15.0 kW						
14	9880	0.80	101.42	**K83A DA160L4**	174	275
16	8950	0.90	91.87	**K83B DA160L4**		275
18	8150	1.00	83.68	**K83C DA160L4**		292
20	7140	1.10	73.30			
22	6500	1.20	66.68			
24	5850	1.35	60.06			
27	5250	1.50	53.92			
32	4510	1.75	46.25			
37	3900	2.0	39.98			
45	3200	2.5	32.84			
49	2910	2.7	29.88			
55	2620	3.0	26.91			
61	2350	3.4	24.16			
71	2020	3.8	20.73			
26	5580	0.80	57.29	**K73A DA160L4**	173	205
28	5070	0.85	52.01	**K73B DA160L4**		205
32	4520	0.95	46.38	**K73C DA160L4**		214
33	4290	1.00	43.99			
37	3900	1.10	40.01			
41	3520	1.25	36.10			
45	3190	1.35	32.75			
52	2760	1.55	28.37			
57	2500	1.75	25.67			
63	2270	1.90	23.31			
71	2020	2.1	20.78			
83	1720	2.5	17.62			
98	1470	2.8	15.04			
107	1340	2.3	13.76			
118	1210	2.5	12.45			
130	1100	2.8	11.30			
146	980	3.2	10.08			
172	835	3.7	8.54			
49	2900	0.90	29.77	**K63A DA160L4**	172	156
55	2600	1.00	26.68	**K63B DA160L4**		156
62	2330	1.05	23.89	**K63C DA160L4**		162
68	2100	1.15	21.50			
78	1830	1.25	18.76			
87	1640	1.35	16.81			
99	1450	1.45	14.91			
112	1280	1.60	13.10			
127	1130	1.50	11.58			
141	1020	1.65	10.43			
162	885	1.90	9.10			
180	795	2.1	8.15			
203	705	2.3	7.23			
232	620	2.5	6.35			
85	1680	0.80	17.27	**K53A DA160L4**	171	132
96	1500	0.90	15.37	**K53B DA160L4**		132
112	1280	1.00	13.17	**K53C DA160L4**		135
127	1130	1.10	11.61			
137	1050	0.95	10.75			
154	930	1.05	9.55			
174	825	1.20	8.46			
195	735	1.35	7.53			
228	630	1.55	6.45			
258	555	1.65	5.69			

Helical bevel geared motors K

18.5 kW

n2 [1/min]	T2 [Nm]	cG	i	Type	Dimensions Page	~kg
13	13700	0.90	114.62	**K93A DA180M4**	175	399
14	12600	1.00	104.80	**K93B DA180M4**		399
16	11100	1.10	92.68	**K93C DA180M4**		416
17	10100	1.20	84.72			
19	9260	1.30	77.34			
21	8380	1.45	69.93			
24	7270	1.70	60.66			
28	6360	1.95	53.08			
32	5600	2.2	46.76			
18	10000	0.80	83.68	**K83A DA180M4**	174	304
20	8780	0.90	73.30	**K83B DA180M4**		304
22	7990	1.00	66.68	**K83C DA180M4**		321
25	7190	1.10	60.06			
27	6460	1.25	53.92			
32	5540	1.45	46.25			
37	4790	1.65	39.98			
42	4160	1.90	34.75			
45	3930	2.0	32.84			
49	3580	2.2	29.88			
55	3220	2.5	26.91			
61	2890	2.7	24.16			
71	2480	3.1	20.73			
82	2150	3.4	17.91			
95	1870	3.8	15.57			
105	1680	2.9	14.01			
117	1510	3.2	12.58			
32	5550	0.80	46.38	**K73A DA180M4**	173	236
41	4320	1.00	36.10	**K73B DA180M4**		236
45	3920	1.10	32.75	**K73C DA180M4**		245
52	3400	1.25	28.37			
57	3070	1.40	25.67			
63	2790	1.55	23.31			
71	2490	1.75	20.78			
84	2110	2.1	17.62			
98	1800	2.3	15.04			
107	1650	1.90	13.76			
118	1490	2.1	12.45			
131	1350	2.3	11.30			
146	1210	2.6	10.08			
173	1020	3.0	8.54			
202	875	3.6	7.29			
62	2860	0.85	23.89	**K63A DA180M4**	172	186
69	2580	0.95	21.50	**K63B DA180M4**		186
79	2250	1.00	18.76	**K63C DA180M4**		192
88	2010	1.10	16.81			
99	1790	1.20	14.91			
113	1570	1.30	13.10			
127	1390	1.25	11.58			
141	1250	1.35	10.43			
162	1090	1.55	9.10			
181	975	1.75	8.15			
204	865	1.90	7.23			
232	760	2.1	6.35			

22.0 kW

n2 [1/min]	T2 [Nm]	cG	i	Type	Dimensions Page	~kg
14	14900	0.80	104.80	**K93A DA180L4**	175	429
16	13200	0.95	92.68	**K93B DA180L4**		429
17	12100	1.00	84.72	**K93C DA180L4**		446
19	11000	1.10	77.34			
21	9960	1.25	69.93			
24	8640	1.40	60.66			
28	7560	1.60	53.08			
32	6660	1.80	46.76			
47	4460	2.7	31.33			
22	9500	0.85	66.68	**K83A DA180L4**	174	334
25	8550	0.95	60.06	**K83B DA180L4**		334
27	7680	1.05	53.92	**K83C DA180L4**		351
32	6590	1.20	46.25			
37	5700	1.40	39.98			
42	4950	1.60	34.75			
45	4680	1.70	32.84			
49	4260	1.85	29.88			
55	3830	2.1	26.91			
61	3440	2.3	24.16			
71	2950	2.6	20.73			
82	2550	2.9	17.91			
95	2220	3.2	15.57			
105	2000	2.4	14.01			
117	1790	2.7	12.58			
137	1540	3.2	10.79			
158	1330	3.7	9.32			
41	5140	0.85	36.10	**K73A DA180L4**	173	266
45	4670	0.95	32.75	**K73B DA180L4**		266
52	4040	1.05	28.37	**K73C DA180L4**		275
57	3660	1.20	25.67			
63	3320	1.30	23.31			
71	2960	1.45	20.78			
84	2510	1.70	17.62			
98	2140	1.95	15.04			
107	1960	1.60	13.76			
118	1770	1.75	12.45			
131	1610	1.95	11.30			
146	1440	2.2	10.08			
173	1220	2.5	8.54			
202	1040	3.0	7.29			
69	3060	0.80	21.50	**K63A DA180L4**	172	216
79	2670	0.85	18.76	**K63B DA180L4**		216
88	2390	0.95	16.81	**K63C DA180L4**		222
99	2120	1.00	14.91			
113	1870	1.10	13.10			
127	1650	1.05	11.58			
141	1490	1.10	10.43			
162	1300	1.30	9.10			
181	1160	1.45	8.15			
204	1030	1.60	7.23			
232	905	1.75	6.35			

Helical bevel geared motors K

n2 [1/min]	T2 [Nm]	cG	i	Type	Dimensions Page	~kg
30.0 kW						
19	15000	0.80	77.34	**K93A DA200L4**	175	466
21	13600	0.90	69.93	**K93B DA200L4**		466
24	11800	1.05	60.66	**K93C DA200L4**		483
28	10300	1.20	53.08			
32	9080	1.35	46.76			
37	7770	1.50	39.98			
42	6750	1.65	34.75			
47	6090	2.0	31.33			
54	5280	2.3	27.18			
62	4620	2.6	23.78			
70	4070	2.8	20.95			
82	3480	3.1	17.91			
95	3020	3.4	15.57			
103	2790	2.6	14.34			
118	2440	3.0	12.55			
32	8980	0.90	46.25	**K83A DA200L4**	174	371
37	7770	1.00	39.98	**K83B DA200L4**		371
42	6750	1.20	34.75	**K83C DA200L4**		388
45	6380	1.25	32.84			
49	5800	1.35	29.88			
55	5230	1.50	26.91			
61	4690	1.70	24.16			
71	4030	1.90	20.73			
82	3480	2.1	17.91			
95	3020	2.3	15.57			
105	2720	1.80	14.01			
117	2440	2.00	12.58			
137	2100	2.3	10.79			
158	1810	2.7	9.32			
182	1570	3.1	8.11			
52	5510	0.80	28.37	**K73A DA200L4**	173	303
57	4990	0.85	25.67	**K73B DA200L4**		303
63	4530	0.95	23.31	**K73C DA200L4**		312
71	4040	1.05	20.78			
84	3420	1.25	17.62			
98	2920	1.40	15.04			
107	2670	1.15	13.76			
118	2420	1.30	12.45			
131	2190	1.40	11.30			
146	1960	1.60	10.08			
173	1660	1.85	8.54			
202	1420	2.2	7.29			
37.0 kW						
24	14600	0.85	60.66	**K93A DA225S4**	175	599
28	12800	0.95	53.08	**K93B DA225S4**		599
31	11200	1.10	46.76	**K93C DA225S4**		616
37	9610	1.20	39.98			
42	8350	1.35	34.75			
47	7530	1.65	31.33			
54	6530	1.90	27.18			
62	5720	2.1	23.78			
70	5040	2.3	20.95			
82	4310	2.5	17.91			
94	3740	2.8	15.57			
102	3450	2.1	14.34			
117	3020	2.4	12.55			
133	2660	2.8	11.06			

n2 [1/min]	T2 [Nm]	cG	i	Type	Dimensions Page	~kg
37.0 kW						
37	9610	0.85	39.98	**K83A DA225S4**	174	504
42	8350	0.95	34.75	**K83B DA225S4**		504
45	7890	1.00	32.84	**K83C DA225S4**		521
49	7180	1.10	29.88			
55	6470	1.25	26.91			
61	5810	1.35	24.16			
71	4980	1.55	20.73			
82	4310	1.70	17.91			
94	3740	1.90	15.57			
105	3370	1.45	14.01			
117	3020	1.60	12.58			
136	2590	1.85	10.79			
158	2240	2.2	9.32			
181	1950	2.5	8.11			
45.0 kW						
28	15500	0.80	53.08	**K93A DA225M4**	175	629
32	13600	0.90	46.76	**K93B DA225M4**		629
37	11600	1.00	39.98	**K93C DA225M4**		646
42	10100	1.10	34.75			
47	9130	1.35	31.33			
54	7920	1.55	27.18			
62	6930	1.70	23.78			
70	6100	1.85	20.95			
82	5220	2.1	17.91			
95	4540	2.3	15.57			
103	4180	1.75	14.34			
118	3660	2.0	12.55			
133	3220	2.3	11.06			
156	2750	2.7	9.45			
179	2390	3.0	8.22			
42	10100	0.80	34.75	**K83A DA225M4**	174	534
45	9570	0.85	32.84	**K83B DA225M4**		534
49	8700	0.90	29.88	**K83C DA225M4**		551
55	7840	1.00	26.91			
61	7040	1.15	24.16			
71	6040	1.30	20.73			
82	5220	1.40	17.91			
95	4540	1.55	15.57			
105	4080	1.20	14.01			
117	3660	1.30	12.58			
137	3140	1.55	10.79			
158	2720	1.80	9.32			
182	2360	2.1	8.11			

Helical bevel geared motors K

K23A

Foot mounted version

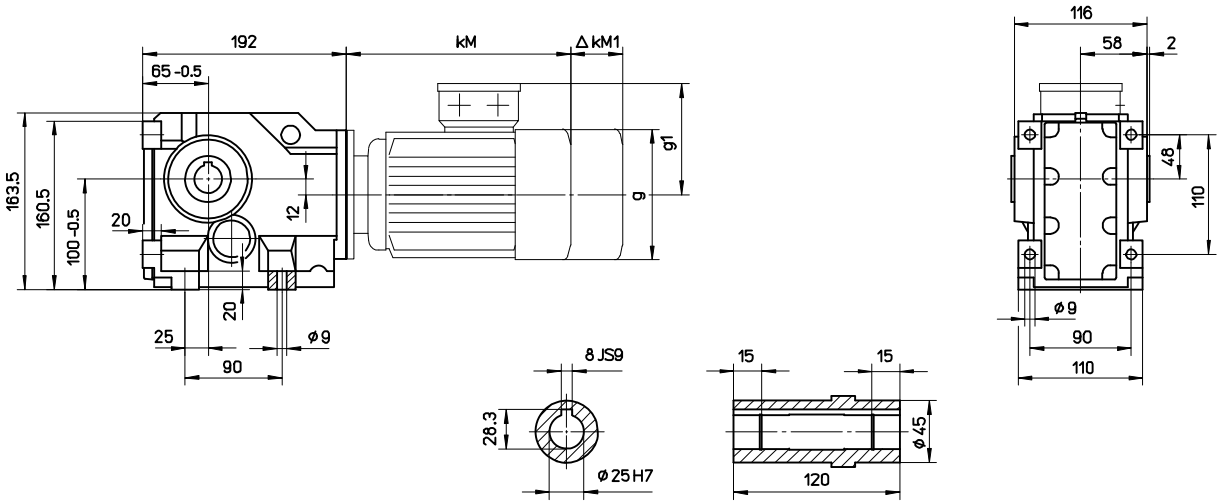

K23B

Shaft mounted version

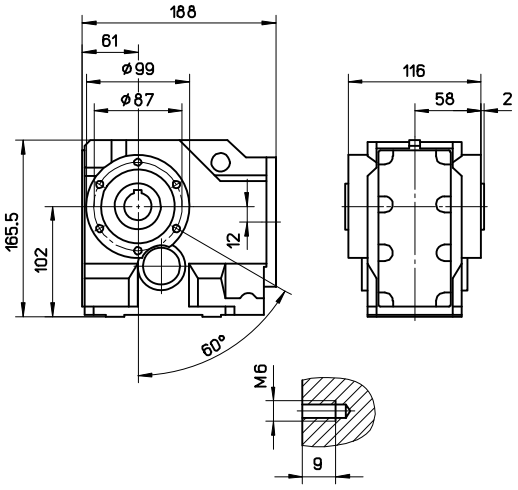

K23C

Flange mounted version

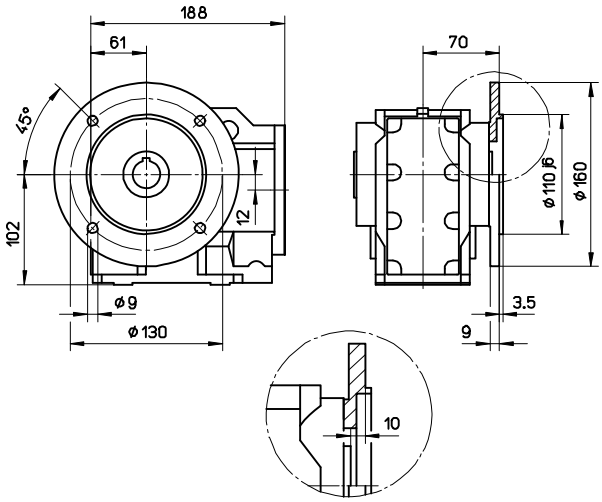

	kM	ΔkM1 Brake	g	g1
K23_ DM63	201	59	123	109
K23_ DM71	228	56	138	119
K23_ DM80	250	66	156	140
K23_ DM90S	266.5	74	176	144
K23_ DM90L	291.5	74	176	144

Helical bevel geared motors K

K33A

Foot mounted version

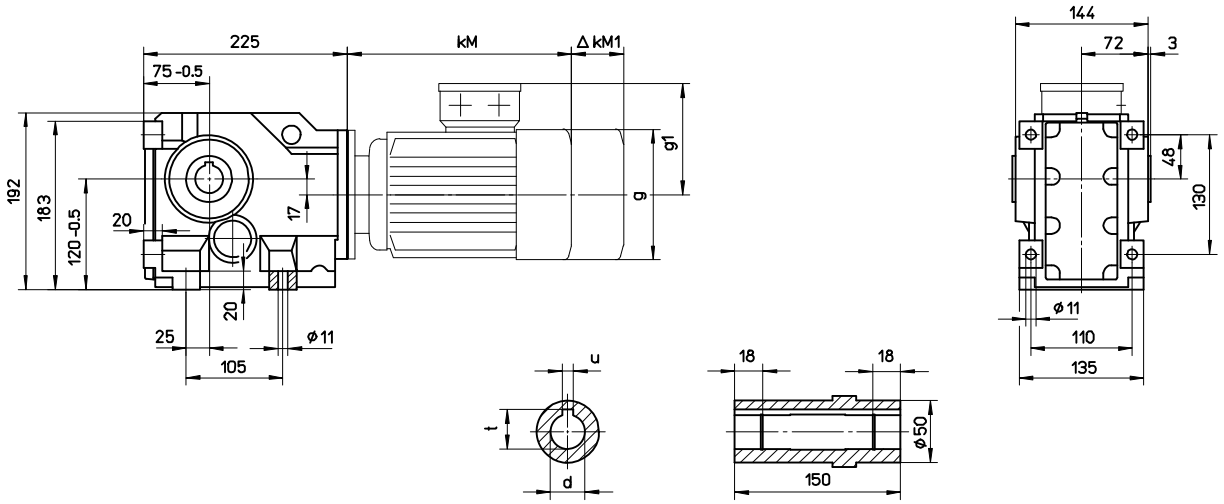

K33B

Shaft mounted version

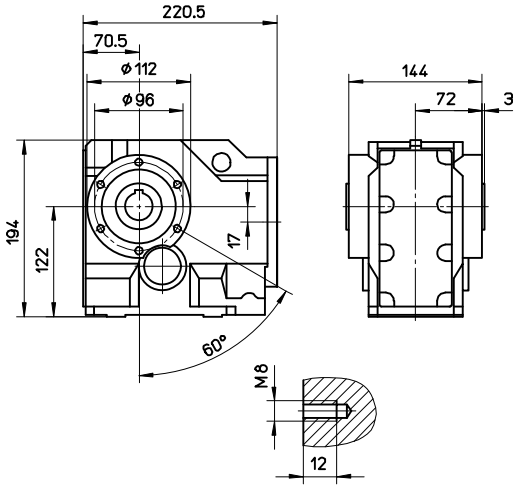

K33C

Flange mounted version

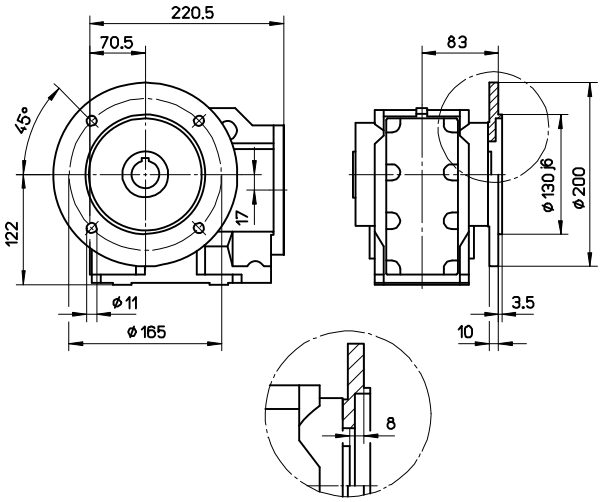

	kM	ΔkM1 Brake	g	g1
K33_ DM63	198	59	123	109
K33_ DM71	224	56	138	119
K33_ DM80	247	66	156	140
K33_ DM90S	261.5	74	176	144
K33_ DM90L	286.5	74	176	144
K33_ DM100	319	91	194	155
K33_ DM112	343	96	218	165

Hollow shaft	d	t	u
35	35H7	38.3	10
30	30H7	33.3	8

Helical bevel geared motors K

K43A

Foot mounted version

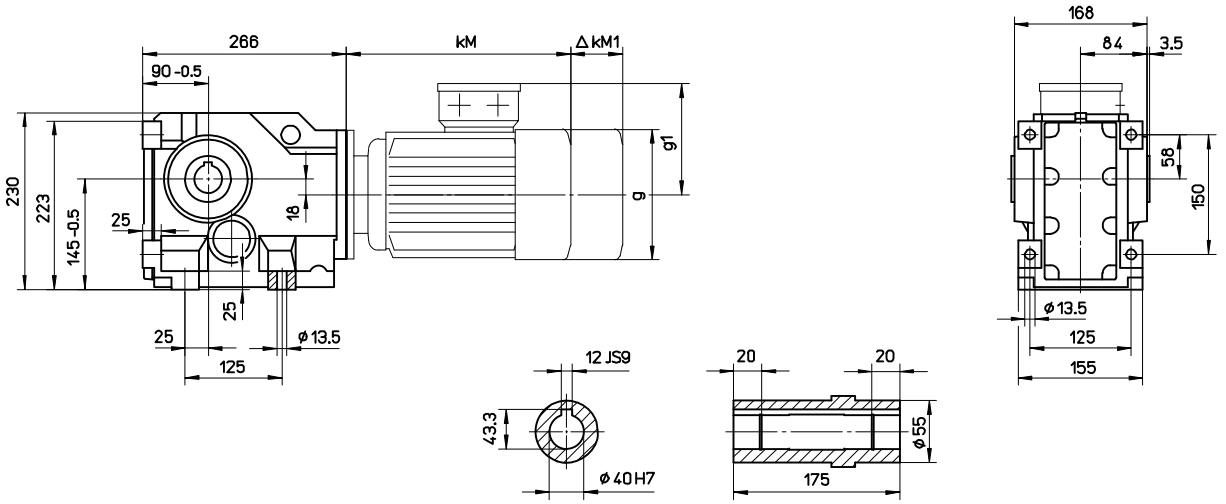

K43B

Shaft mounted version

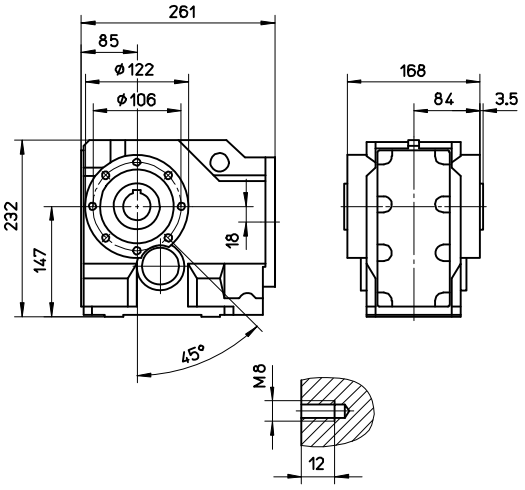

K43C

Flange mounted version

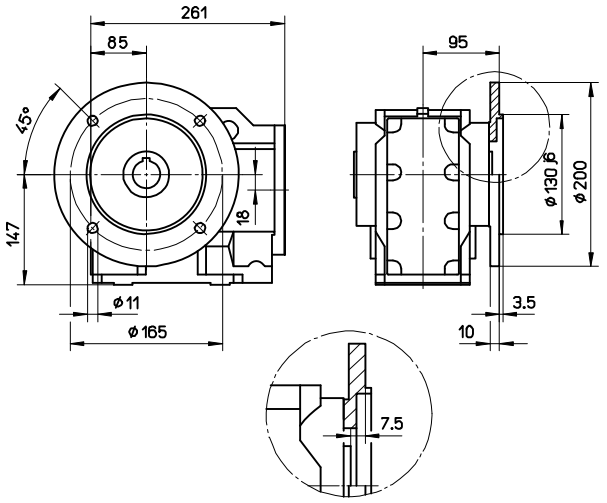

	kM	ΔkM1 Brake	g	g1
K43_ DM63	198.5	59	123	109
K43_ DM71	223.5	56	138	119
K43_ DM80	247.5	66	156	140
K43_ DM90S	262	74	176	144
K43_ DM90L	287	74	176	144
K43_ DM100	319	91	194	155
K43_ DM112	342	96	218	165
K43_ DA132	435	99	245	188

Helical bevel geared motors K

K53A

Foot mounted version

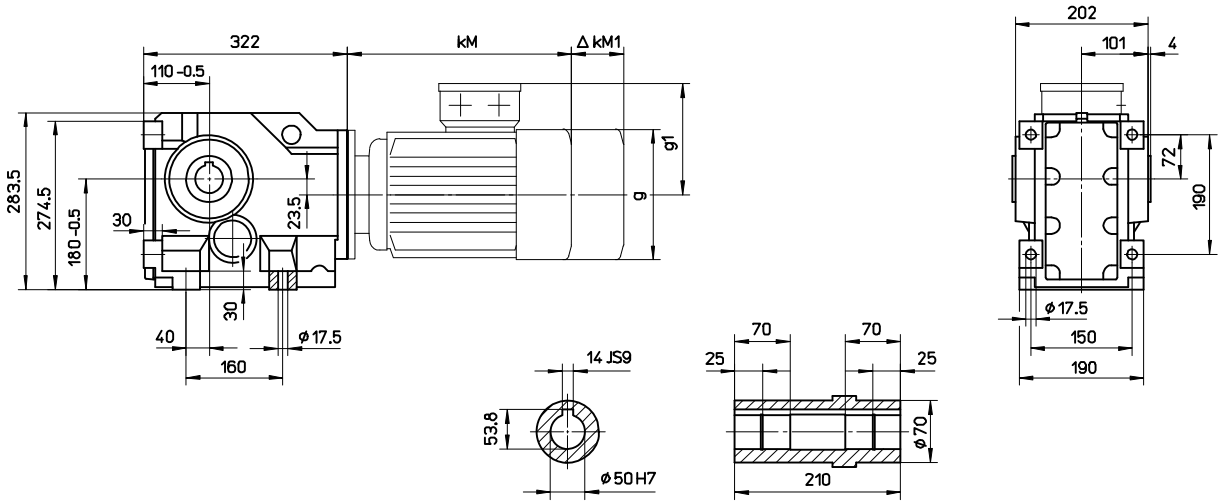

K53B

Shaft mounted version

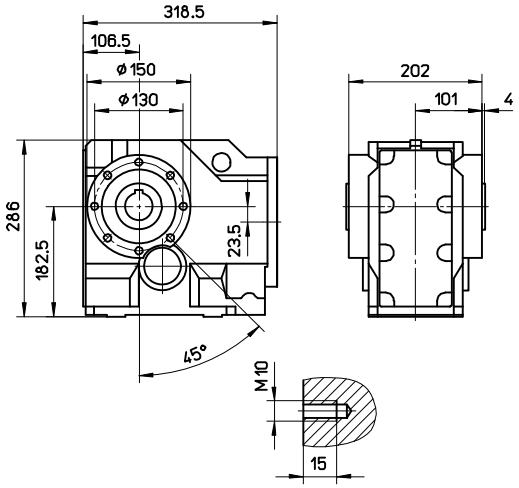

K53C

Flange mounted version

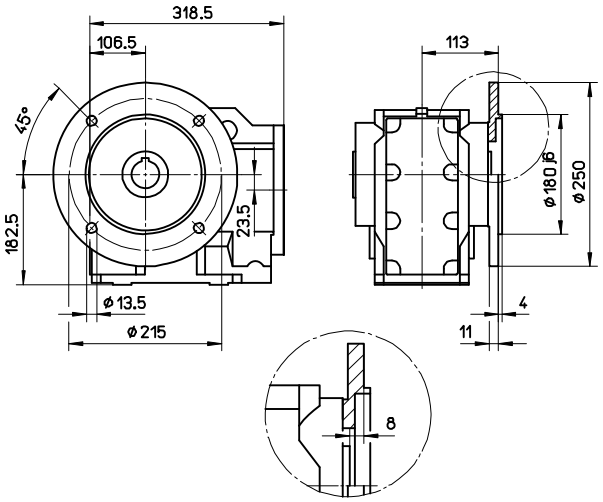

	kM	ΔkM1 Brake	g	g1
K53_ DM71	220	56	138	119
K53_ DM80	243	66	156	140
K53_ DM90S	259.5	74	176	144
K53_ DM90L	284.5	74	176	144
K53_ DM100	314	91	194	155
K53_ DM112	337.5	96	218	165
K53_ DA132	431.5	99	245	188
K53_ DA160	539.5	120	311	250

Helical bevel geared motors K

K63A

Foot mounted version

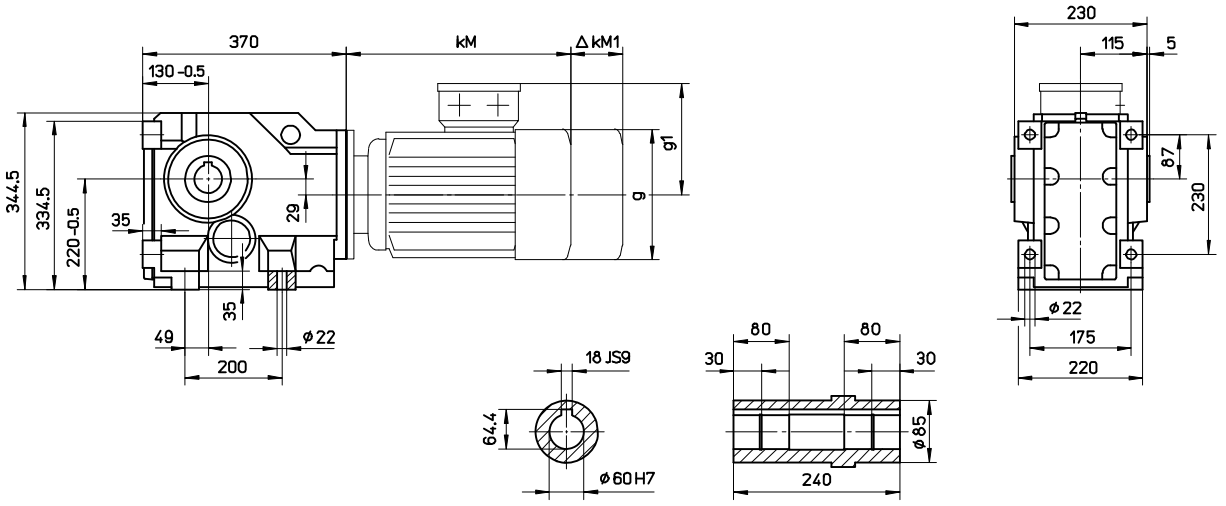

K63B

Shaft mounted version

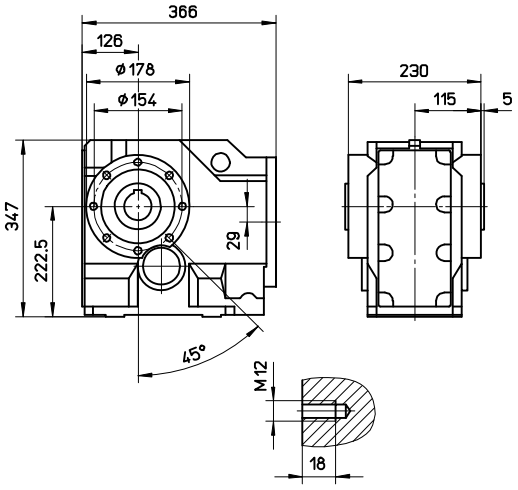

K63C

Flange mounted version

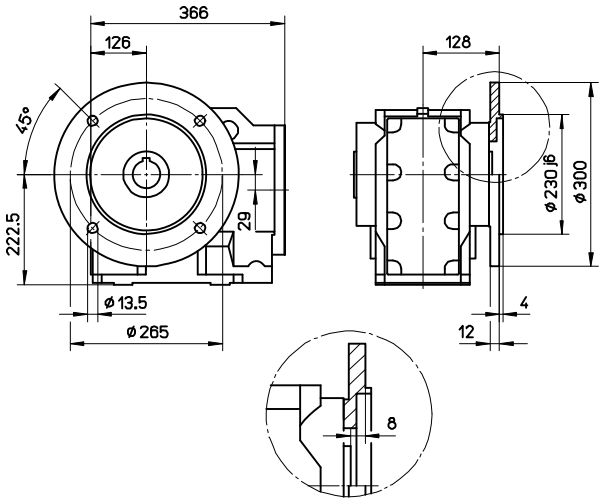

	kM	ΔkM1 Brake	g	g1
K63_ DM80	238	66	156	140
K63_ DM90S	254.5	74	176	144
K63_ DM90L	279.5	74	176	144
K63_ DM100	308	91	194	155
K63_ DM112	332.5	96	218	165
K63_ DA132	428	99	245	188
K63_ DA160	532	120	311	250
K63_ DA180	589	139	356	291

Helical bevel geared motors K

K73A

Foot mounted version

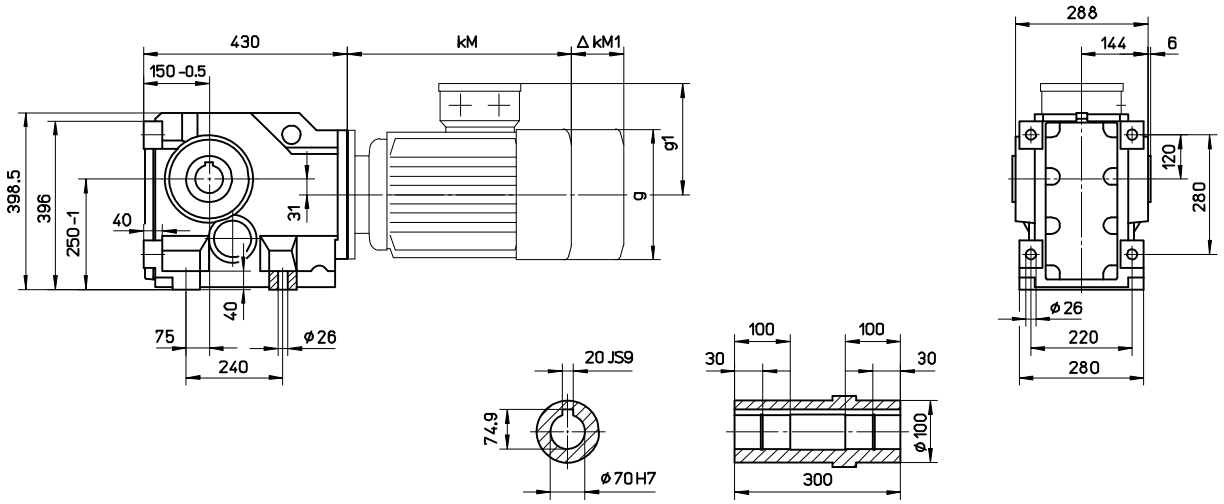

K73B

Shaft mounted version

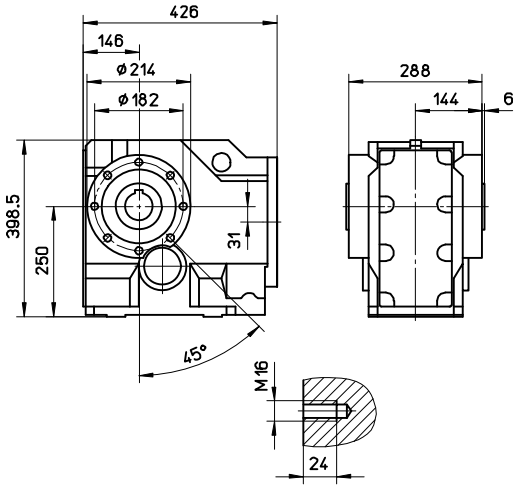

K73C

Flange mounted version

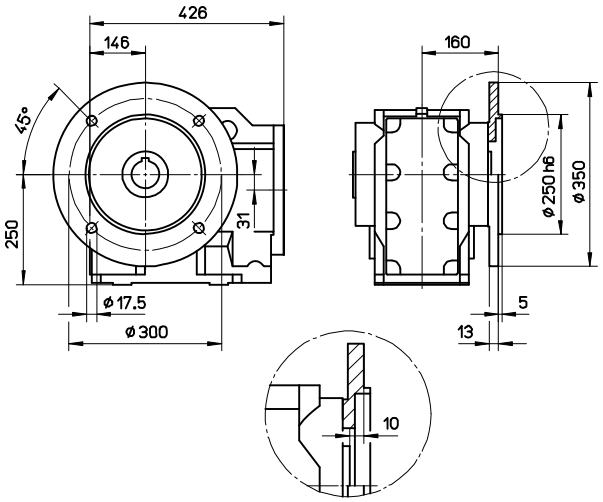

	kM	ΔkM1 Brake	g	g1
K73_ DM90S	247.5	74	176	144
K73_ DM90L	272.5	74	176	144
K73_ DM100	304	91	194	155
K73_ DM112	325.5	96	218	165
K73_ DA132	421	99	245	188
K73_ DA160	526	120	311	250
K73_ DA180	583	139	356	291
K73_ DA200	633	139	356	291

Helical bevel geared motors K

K83A

Foot mounted version

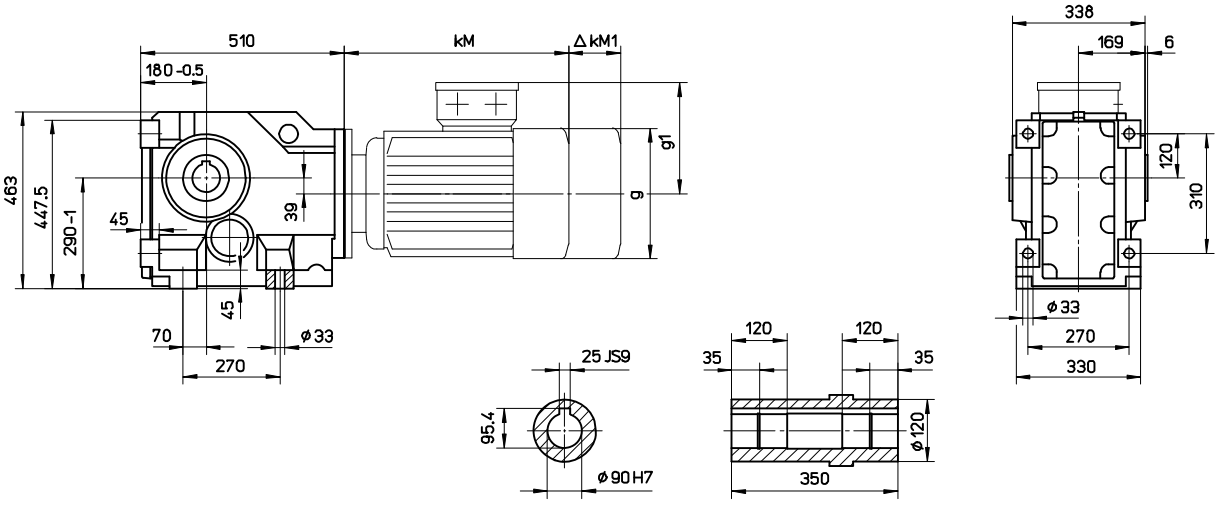

K83B

Shaft mounted version

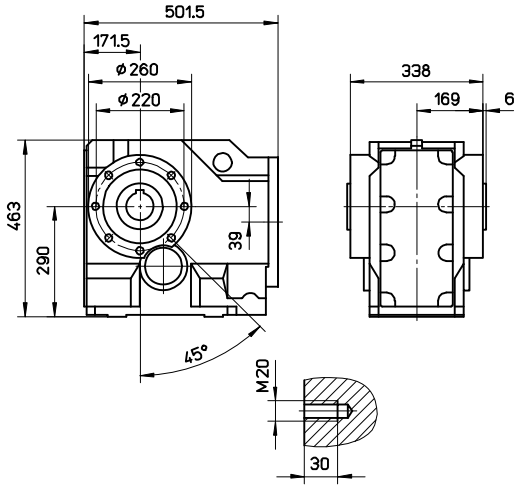

K83C

Flange mounted version

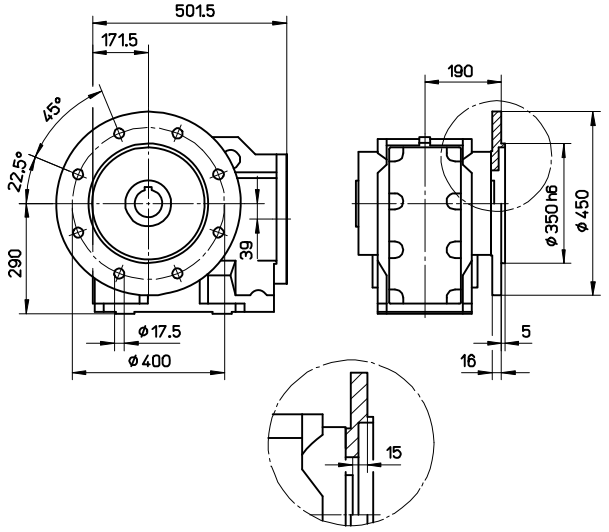

	kM	ΔkM1 Brake	g	g1
K83_ DM100	299	91	194	155
K83_ DM112	320.5	96	218	165
K83_ DA132	413	99	245	188
K83_ DA160	522	120	311	250
K83_ DA180	577.5	139	356	291
K83_ DA200	627.5	139	356	291
K83_ DA225S	627.5	139	356	299
K83_ DA225M	687.5	139	356	299

Helical bevel geared motors K

K93A

Foot mounted version

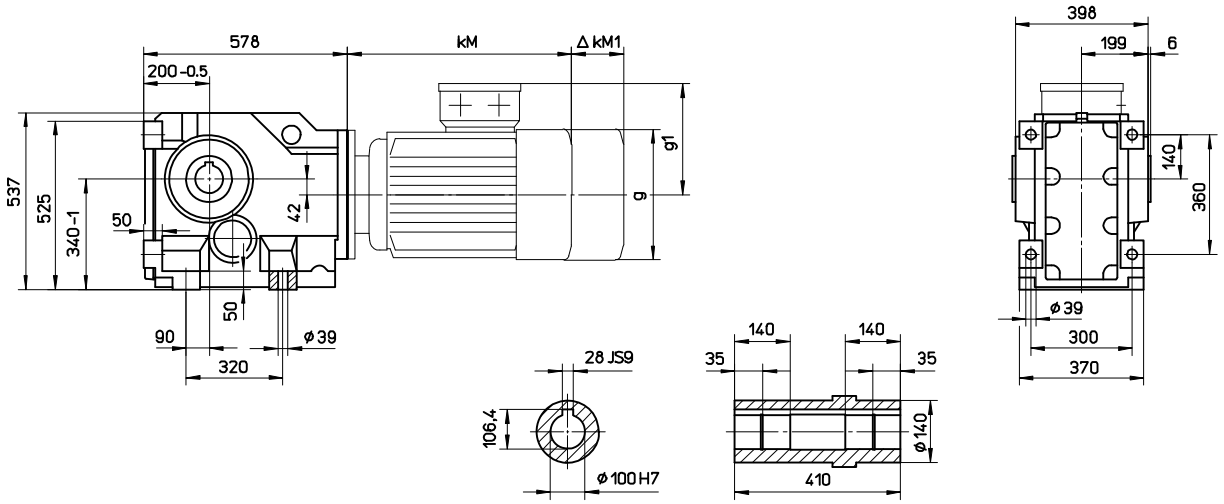

K93B

Shaft mounted version

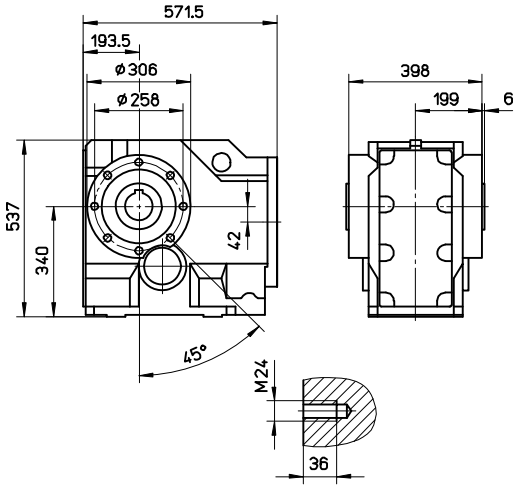

K93C

Flange mounted version

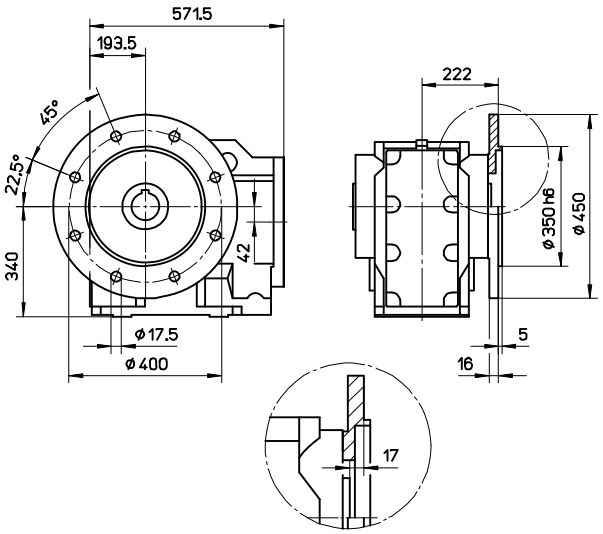

	kM	ΔkM1 Brake	g	g1
K93_ DA132	396.5	99	245	188
K93_ DA160	503.5	120	311	250
K93_ DA180	560.5	139	356	291
K93_ DA200	610.5	139	356	291
K93_ DA225S	610.5	139	356	299
K93_ DA225M	670.5	139	356	299

Helical bevel gear units K
D - Shaft mounted version + foot area

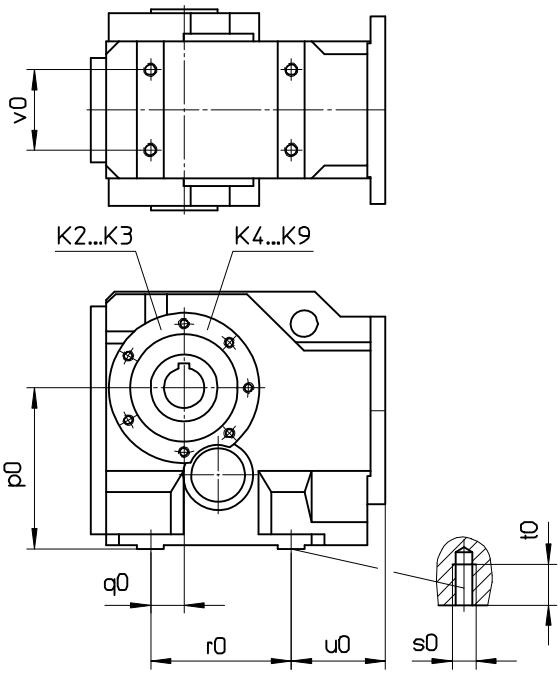

Gear unit	p0	q0	r0	s0	t0	u0	v0
K2	100	25	90	M8	12	62	50
K3	120	25	105	M10	15	70	60
K4	145	25	125	M12	18	76	70
K5	180	40	160	M16	24	92	80
K6	220	49	200	M16	24	89	95
K7	250	75	240	M20	30	115	125
K8	290	70	270	M24	36	130	150
K9	340	90	320	M30	45	148	160

Helical bevel gear units K
E - Flange mounted version + foot area

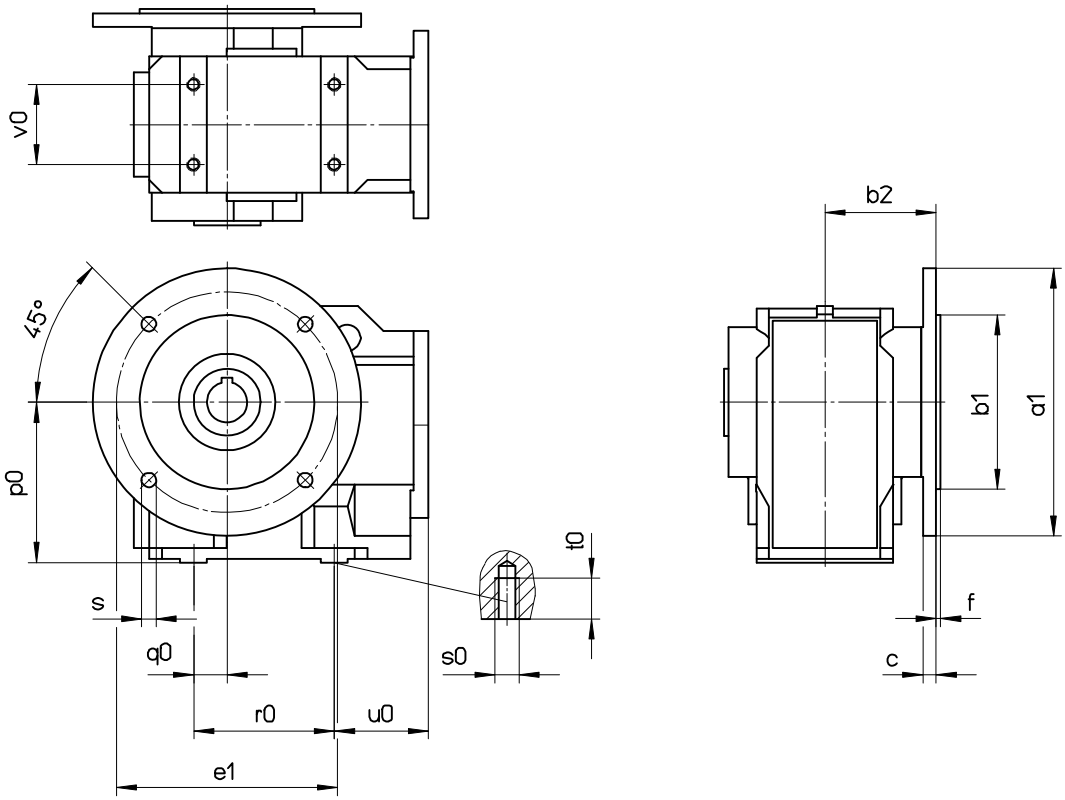

Gear unit	p0	q0	r0	s0	t0	u0	v0	a1	e1	b1	s	c	f	b2
K2	100	25	90	M8	12	62	50	160	130	110	9	9	3.5	70
K3	120	25	105	M10	15	70	60	200	165	130 j6	11	10	3.5	83
K4	145	25	125	M12	18	76	70	200	165	130 j6	11	10	3.5	95
K5	180	40	160	M16	24	92	80	250	215	180 j6	13.5	11	4	113
K6	220	49	200	M16	24	89	95	300	265	230j6	13.5	12	4	128
K7	250	75	240	M20	30	115	125	350	300	250h6	17.5	13	5	160
K8	290	70	270	M24	36	130	150	450	400	350h6	17.5	16	5	190
K9	340	90	320	M30	45	148	160	450	400	350h6	17.5	16	5	222

Helical bevel gear units K
V - Output shaft with key

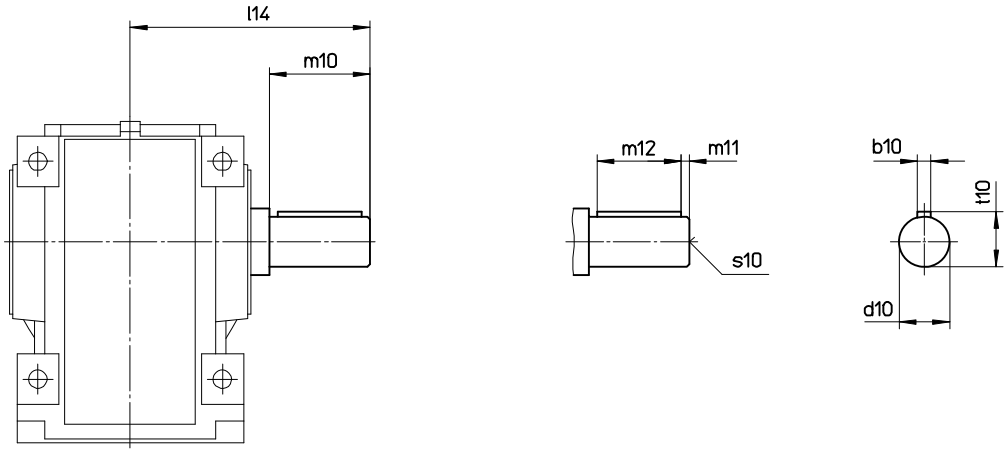

Gear unit	d10	m10	m11	m12	b10	t10	s10	l14
K2	25	50	5	40	8	28	M10	120
K3	30	60	5	50	8	33	M10	143
	35	70	5	60	10	38	M12	153
K4	40	80	5	70	12	43	M16	175
K5	50	100	10	80	14	53.5	M16	213
K6	60	120	10	100	18	64	M20	248
K7	75	140	7.5	125	20	79.5	M20	300
K8	90	170	15	140	25	95	M24	360
K9	110	210	15	180	28	116	M24	432

Helical bevel gear units K
S - Hollow shaft with shrink disc

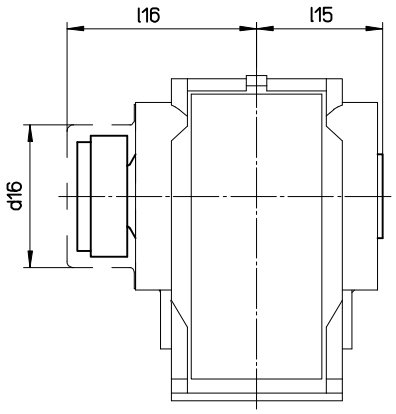

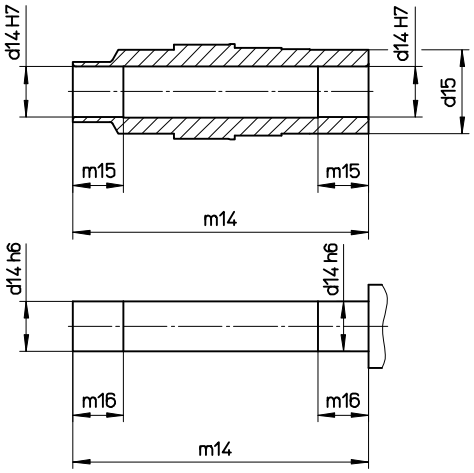

Gear unit	d14	d15	d16	m14	m15	m16	l15	l16
K2	25	45	77	143	25	27	60	97
K3	30	50	86	176	30	32	75	113
	35	50	86	176	30	32	75	113
K4	40	55	96	202	40	42	87.5	127
K5	50	70	117	242	50	52	105	150
K6	60	85	148	274	60	62	120	172
K7	70	100	180	343	70	72	150	209
K8	90	120	225	402	80	82	175	247
K9	110	140	242	473	100	102	205	288

Helical bevel gear units K
Z - Splined hollow shaft

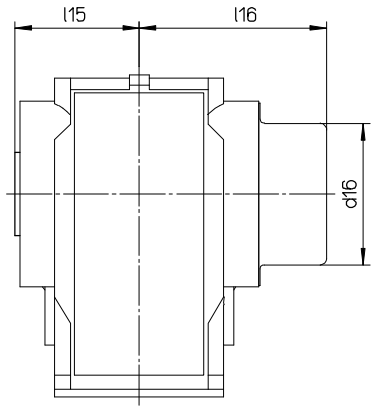

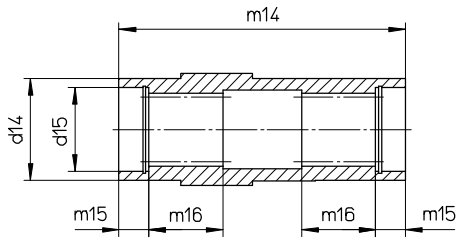

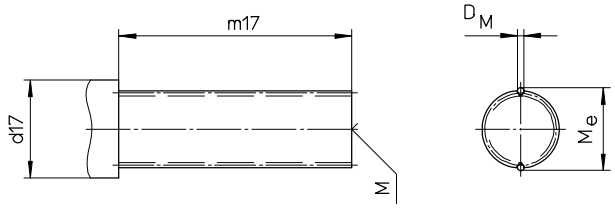

Gear unit	DIN5480	l15	l16	d16	m14	m15	m16	d14	d15	m17	d17	Dm	Me	M DIN 332
K2	30x1.25x30x22	60	97	77	120	18	25	45	35	88	40	2.75	$33.05_{-0.04}$	D..M10
K3	35x2x30x16	75	113	86	150	18	32	50	40	118	46	4	$38.94_{-0.04}$	D..M12
K4	40x2x30x18	87.5	127	96	175	23	42	55	42	140	50	4.5	$45.08_{-0.04}$	D..M16
K5	50x2x30x24	105	150	117	210	23	52	70	52	174	62	4	$54.16_{-0.05}$	D..M16
K6	65x2x30x31	120	172	148	240	25	62	85	70	195	82	4	$68.99_{-0.06}$	D..M20
K7	70x2x30x34	150	209	180	300	25	72	100	72	255	85	4	$74.18_{-0.06}$	D..M20

Helical bevel gear units K
T1 - Torque arm

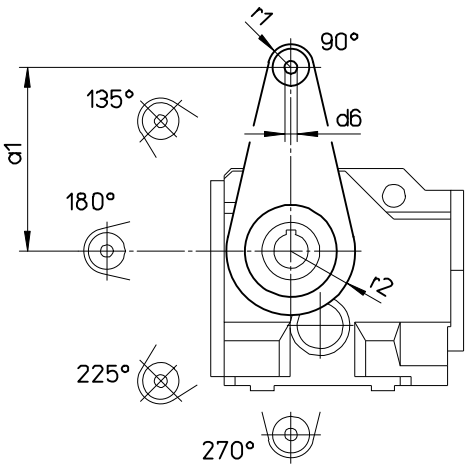

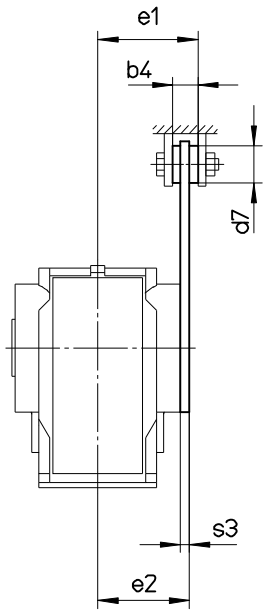

Gear unit	a1	b4	d6	d7	e1	e2	s3	r1	r2
K2	130	15	11	32	68.5	64	6	20	49.5
K3	160	22	11	32	87	80	8	20	56
K4	200	22	11	32	99	92	8	23	61
K5	250	32	17	40	121	109	8	30	75
K6	300	66	16	32	155.5	130	15	30	89
K7	350	96	24	42	202	164	20	36	107
K8	450	96	24	42	229.5	194	25	36	130
K9	550	135	38	64	281.5	229	30	56	153